KB Vorspann-Technik

European Technical Assessment
ETA – 06/0147

CE

BBR VT CONA CMI

Bonded Post-tensioning System with 04 to 31 Strands

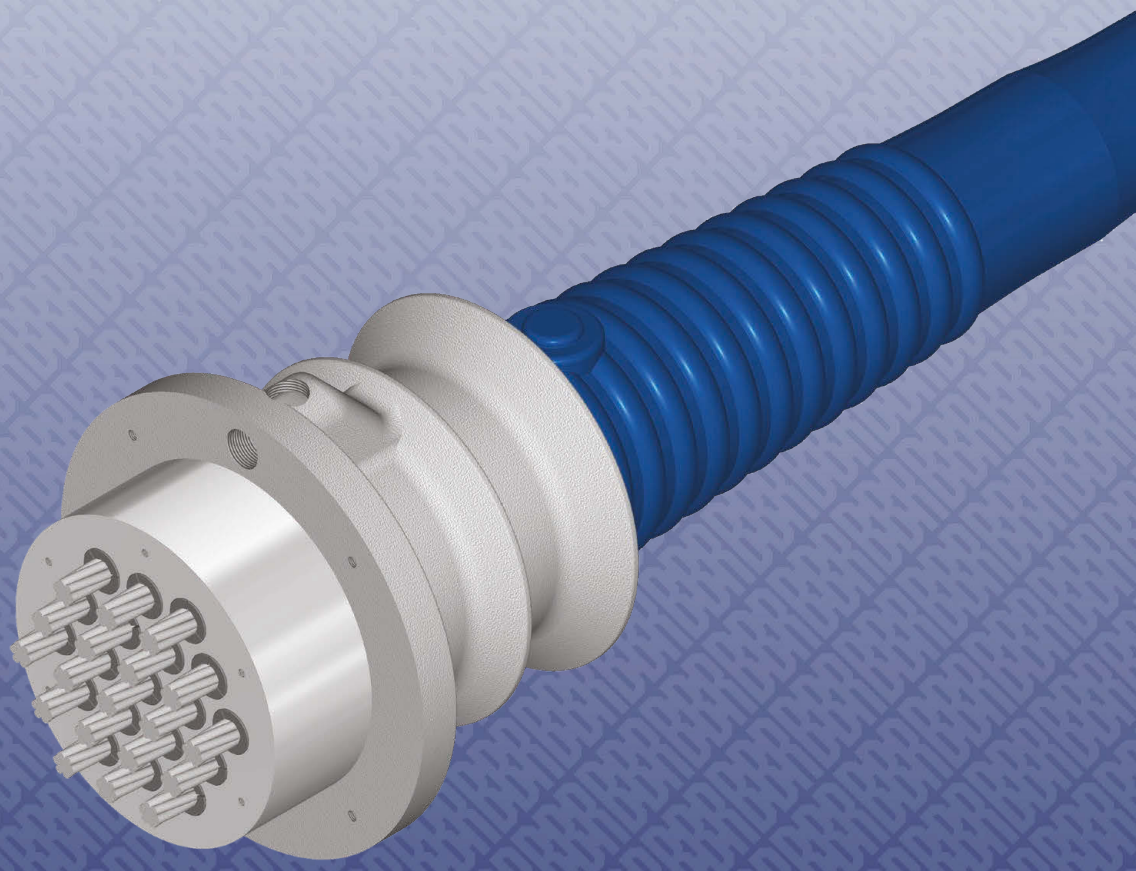

A Global Network of Experts
www.bbrnetwork.com

CE
0432

ETA-06/0147
BBR VT CONA CMI
Bonded Post-tensioning System with 04 to 31 Strands

BBR VT International Ltd
Ringstrasse 2, 8603 Schwerzenbach (Switzerland)
www.bbrnetwork.com

0432-CPD-11 9181-1.1/3
13

SPECIMEN

Responsible BBR PT Specialist Company

CE

The delivery note accompanying components of the BBR VT CONA CMI Post-tensioning System will contain the CE marking.

Company Year BBR PT Specialist Company www.bbrnetwork.com

Assembly and installation of BBR VT CONA CMI tendons must only be carried out by qualified BBR PT Specialist Companies. Find the local BBR PT Specialist Company by visiting the BBR Network website www.bbrnetwork.com.

EOTA

European Organisation for Technical Approvals
Europäische Organisation für Technische Zulassungen
Organisation Européenne pour l'Agrément technique

ETAG 013

Guideline for European Technical Approval of Post-tensioning Kits for Prestressing of Structures

CWA 14646

Requirements for the installation of post-tensioning kits for prestressing of structures and qualification of the specialist company and its personnel

BBR E-Trace
www.bbrnetwork.com

BBR E-Trace is the trading and quality assurance platform of the BBR Network linking the Holder of Approval, BBR VT International Ltd, BBR PT Specialist Companies and the BBR Manufacturing Plant. Along with the established BBR Factory Production Control, BBR E-Trace provides effective supply chain management including installation, delivery notes and highest quality standards, as well as full traceability of components.

electronic copy

Austrian Institute of Construction Engineering
Schenkenstrasse 4 | T +43 1 533 65 50
1010 Vienna | Austria | F +43 1 533 64 23
www.oib.or.at | mail@oib.or.at

Designated according to Article 29 of Regulation (EU) No 305/2011

Member of EOTA
www.eota.eu

European Technical Assessment

ETA-06/0147
of 30.10.2017

General part

Technical Assessment Body issuing the European Technical Assessment	Österreichisches Institut für Bautechnik (OIB) Austrian Institute of Construction Engineering
Trade name of the construction product	BBR VT CONA CMI – Bonded Post-tensioning System with 04 to 31 Strands
Product family to which the construction product belongs	Post-tensioning kit for prestressing of structures with internal bonded strands
Manufacturer	BBR VT International Ltd Ringstrasse 2 8603 Schwerzenbach (ZH) Switzerland
Manufacturing plant	BBR VT International Ltd Ringstrasse 2 8603 Schwerzenbach (ZH) Switzerland
This European Technical Assessment contains	61 pages including Annexes 1 to 32, which form an integral part of this assessment.
This European Technical Assessment is issued in accordance with Regulation (EU) No 305/2011, on the basis of	ETAG 013, Guideline for European technical approval for Post-Tensioning Kits for Prestressing of Structures, edition June 2002, used according to Article 66 (3) of Regulation (EU) № 305/2011 as European Assessment Document.
This European Technical Assessment replaces	European Technical Assessment ETA-06/0147 of 31.05.2016.

electronic copy

Table of contents

EUROPEAN TECHNICAL ASSESSMENT ETA-06/0147 OF 30.10.2017 1
GENERAL PART 1
TABLE OF CONTENTS 2
REMARKS 6
SPECIFIC PARTS 6
1 TECHNICAL DESCRIPTION OF THE PRODUCT 6
1.1 GENERAL 6
PT SYSTEM 7
1.2 DESIGNATION AND RANGE OF ANCHORAGES AND COUPLERS 7
1.2.1 Designation 7
1.2.2 Anchorage 8
1.2.3 Fixed and stressing coupler 8
1.2.3.1 General 8
1.2.3.2 Single plane coupler, FK, SK 8
1.2.3.3 Sleeve coupler FH and SH 8
1.2.4 Movable coupler BK und BH 9
1.2.5 Encapsulated and electrically isolated tendon 9
1.2.6 Layout of the anchorage recess 9
1.3 DESIGNATION AND RANGE OF THE TENDONS 10
1.3.1 Designation 10
1.3.2 Range 10
1.3.2.1 General 10
1.3.2.2 CONA CMI n06-140 10
1.3.2.3 CONA CMI n06-150 10
1.4 SHEATHS 11
1.4.1 General 11
1.4.2 Degree of filling, f 11
1.4.3 Steel strip sheaths 11
1.4.4 Plastic ducts 11
1.4.5 Pre-bent smooth circular steel ducts 12
1.5 FRICTION LOSSES 12
1.6 SUPPORT OF TENDONS 13
1.7 SLIP AT ANCHORAGES AND COUPLERS 14
1.8 CENTRE SPACING AND EDGE DISTANCE FOR ANCHORAGES 14
1.9 MINIMUM RADII OF CURVATURE 14
1.10 CONCRETE STRENGTH AT TIME OF STRESSING 15
COMPONENTS 16

electronic copy electronic copy electronic copy electronic copy electronic copy electronic copy

1.11 PRESTRESSING STEEL STRANDS 16
1.12 ANCHORAGE AND COUPLER 16
1.12.1 General 16
1.12.2 Anchor head 16
1.12.3 Bearing trumplate 16
1.12.4 Trumpets 16
1.12.5 Coupler anchor head K and H 17
1.12.6 Ring wedges 17
1.12.7 Helix and additional reinforcement 17
1.12.8 Caps 18
1.12.8.1 General 18
1.12.8.2 Grouting cap A 18
1.12.8.3 Protection caps 18
1.12.9 Accessories for inlets and outlets 18
1.13 SHEATHS 18
1.13.1 Steel strip sheaths 18
1.13.2 Plastic ducts 19
1.14 MATERIAL SPECIFICATIONS 19
1.15 PERMANENT CORROSION PROTECTION 19
1.15.1 General 19
1.15.2 Grout 19
2 SPECIFICATION OF THE INTENDED USES IN ACCORDANCE WITH THE APPLICABLE EUROPEAN ASSESSMENT DOCUMENT (HEREINAFTER EAD) 19
2.1 INTENDED USES 19
2.2 ASSUMPTIONS 20
2.2.1 General 20
2.2.2 Packaging, transport, and storage 20
2.2.3 Design 20
2.2.3.1 General 20
2.2.3.2 Anchorage Recess 20
2.2.3.3 Maximum prestressing force 20
2.2.3.4 Reinforcement in the anchorage zone 20
2.2.3.5 Tendons in masonry structures – Load transfer to the structure 21
2.2.4 Installation 21
2.2.4.1 General 21
2.2.4.2 Stressing operation 22
2.2.4.3 Restressing 22
2.2.4.4 Grouting 22
2.2.4.5 Welding 22
2.3 ASSUMED WORKING LIFE 22

electronic copy

3 PERFORMANCE OF THE PRODUCT AND REFERENCES TO THE METHODS USED FOR ITS ASSESSMENT 23
3.1 ESSENTIAL CHARACTERISTICS 23
3.2 PRODUCT PERFORMANCE 25
3.2.1 Mechanical resistance and stability 25
3.2.1.1 Resistance to static load 25
3.2.1.2 Resistance to fatigue 25
3.2.1.3 Load transfer to the structure 25
3.2.1.4 Friction coefficient 25
3.2.1.5 Deviation, deflection (limits) 25
3.2.1.6 Practicability, reliability of installation 25
3.2.2 Hygiene, health, and the environment 25
3.2.3 Related aspects of serviceability 26
3.2.4 Mechanical resistance and stability 26
3.2.4.1 Resistance to static load under cryogenic conditions 26
3.2.4.2 Practicability, reliability of installation 26
3.2.4.3 Practicability, reliability of installation 26
3.2.4.4 Practicability, reliability of installation 26
3.2.4.5 Tendons in masonry structures – Load transfer to the structure 26
3.3 ASSESSMENT METHODS 26
3.4 IDENTIFICATION 27
4 ASSESSMENT AND VERIFICATION OF CONSTANCY OF PERFORMANCE (HEREINAFTER AVCP) SYSTEM APPLIED, WITH REFERENCE TO ITS LEGAL BASE 27
4.1 SYSTEM OF ASSESSMENT AND VERIFICATION OF CONSTANCY OF PERFORMANCE 27
4.2 AVCP FOR CONSTRUCTION PRODUCTS FOR WHICH A EUROPEAN TECHNICAL ASSESSMENT HAS BEEN ISSUED 27
5 TECHNICAL DETAILS NECESSARY FOR THE IMPLEMENTATION OF THE AVCP SYSTEM, AS PROVIDED FOR IN THE APPLICABLE EAD 28
5.1 TASKS FOR THE MANUFACTURER 28
5.1.1 Factory production control 28
5.1.2 Declaration of performance 28
5.2 TASKS FOR THE NOTIFIED PRODUCT CERTIFICATION BODY 28
5.2.1 Initial inspection of the manufacturing plant and of factory production control 28
5.2.2 Continuing surveillance, assessment, and evaluation of factory production control 29
5.2.3 Audit-testing of samples taken by the notified product certification body at the manufacturing plant or at the manufacturer's storage facilities 29
ANNEXES 30
ANNEX 1 OVERVIEW ON ANCHORAGES 30
ANNEX 2 OVERVIEW ON COUPLERS 31
ANNEX 3 COMPONENTS – ANCHORAGE AND COUPLER 32
ANNEX 4 COMPONENTS – ANCHORAGE AND COUPLER 33
ANNEX 5 COMPONENTS – ACCESSORY 34

electronic copy

ANNEX 6 COMPONENTS – ACCESSORY 35
ANNEX 7 ELECTRICALLY ISOLATED TENDON – COMPONENTS – ANCHORAGE AND ACCESSORY 36
ANNEX 8 PLASTIC DUCT – CIRCULAR DUCT 0406–3106 37
ANNEX 9 PLASTIC DUCT – FLAT DUCT 0406 38
ANNEX 10 MATERIAL SPECIFICATIONS 39
ANNEX 11 STRAND SPECIFICATIONS 40
ANNEX 12 TENDON RANGES 41
ANNEX 13 MAXIMUM PRESTRESSING AND OVERSTRESSING FORCES 42
ANNEX 14 MINIMUM RADII OF CURVATURE OF STEEL STRIP SHEATH 43
ANNEX 15 MINIMUM RADII OF CURVATURE OF CIRCULAR PLASTIC DUCT 44
ANNEX 16 MINIMUM RADII OF CURVATURE OF FLAT PLASTIC DUCT 45
ANNEX 17 MINIMUM CENTRE SPACING AND EDGE DISTANCE 46
ANNEX 18 ANCHORAGE ZONE – DIMENSIONS – HELIX AND ADDITIONAL REINFORCEMENT AND SPACING 47
ANNEX 19 ANCHORAGE ZONE – DIMENSIONS – HELIX AND ADDITIONAL REINFORCEMENT AND SPACING 48
ANNEX 20 ANCHORAGE ZONE – DIMENSIONS – HELIX AND ADDITIONAL REINFORCEMENT AND SPACING 49
ANNEX 21 ANCHORAGE ZONE – DIMENSIONS – HELIX AND ADDITIONAL REINFORCEMENT AND SPACING 50
ANNEX 22 ANCHORAGE ZONE – DIMENSIONS – MODIFICATION OF CENTRE SPACING AND EDGE DISTANCE 51
ANNEX 23 CONSTRUCTION STAGES 52
ANNEX 24 DESCRIPTION OF INSTALLATION 53
ANNEX 25 DESCRIPTION OF INSTALLATION 54
ANNEX 26 BBR VT PLASTIC DUCT – SPECIFICATION OF POLYPROPYLENE 55
ANNEX 27 CONTENTS OF THE PRESCRIBED TEST PLAN 56
ANNEX 28 BBR VT PLASTIC DUCT – CONTENTS OF THE PRESCRIBED TEST PLAN 57
ANNEX 29 AUDIT TESTING 58
ANNEX 30 ESSENTIAL CHARACTERISTICS FOR THE INTENDED USES 59
ANNEX 31 REFERENCE DOCUMENTS 60
ANNEX 32 REFERENCE DOCUMENTS 61

electronic copy electronic copy electronic copy electronic copy electronic copy electronic copy

Remarks

Translations of the European Technical Assessment in other languages shall fully correspond to the original issued document and should be identified as such.

Communication of the European Technical Assessment, including transmission by electronic means, shall be in full. However, partial reproduction may be made with the written consent of Österreichisches Institut für Bautechnik. Any partial reproduction has to be identified as such.

Specific parts

1 Technical description of the product

1.1 General

The European Technical Assessment[1] – ETA – applies to a kit, the PT system

BBR VT CONA CMI – Bonded Post-tensioning System with 04 to 31 Strands,

comprising the following components, see Annex 1 and Annex 2.

– Tendon

Bonded tendon with 04 to 31 tensile elements

– Tensile element

7-wire prestressing steel strand with nominal diameters and nominal tensile strength as given in Table 1.

Table 1 Tensile elements

Nominal diameter	Nominal cross-sectional area	Maximum characteristic tensile strength
mm	mm^2	MPa
15.3	140	1 860
15.7	150	

NOTE 1 MPa = 1 N/mm^2

– Anchorage and coupler

Anchorage of the prestressing steel strands with ring wedges

End anchorage

Fixed (passive) anchor or stressing (active) anchor as end anchorage (SA, FA) for tendons with 04, 07, 09, 12, 15, 19, 22, 24, 27, and 31 prestressing steel strands

[1] ETA-06/0147 was firstly issued in 2006 as European technical approval with validity from 25.08.2006, extended in 2011 with validity from 05.07.2011, amended in 2013 with validity from 04.03.2013, converted in 2016 to European Technical Assessment ETA-06/0147 of 31.05.2016, and amended in 2017 to European Technical Assessment ETA-06/0147 of 30.10.2017.

Member of EOTA

electronic copy

Fixed (passive) anchor or stressing (active) anchor (SA, FA) for encapsulated tendons with 04, 07, 09, 12, 15, 19, 22, 24, 27, and 31 prestressing steel strands

Fixed (passive) anchor or stressing (active) anchor (SAE, FAE) for electrically isolated tendons with 04, 07, 09, 12, 15, 19, 22, 24, 27, and 31 prestressing steel strands

Fixed or stressing coupler

Single plane coupler (FK, SK) for tendons with 04, 07, 09, 12, 15, 19, 22, 24, 27, and 31 prestressing steel strands

Sleeve coupler (FH, SH) for tendons with 04, 07, 09, 12, 15, 19, 22, 24, 27, and 31 prestressing steel strands

Sleeve coupler (FH, SH) for encapsulated tendons with 04, 07, 09, 12, 15, 19, 22, 24, 27, and 31 prestressing steel strands

Sleeve coupler (FHE, SHE) for electrically isolated tendons with 04, 07, 09, 12, 15, 19, 22, 24, 27, and 31 prestressing steel strands

Movable coupler

Single plane coupler (BK) for tendons with 04, 07, 09, 12, 15, 19, 22, 24, 27, and 31 prestressing steel strands

Sleeve coupler (BH) for tendons with 04, 07, 09, 12, 15, 19, 22, 24, 27, and 31 prestressing steel strands

- Bearing trumplate for tendons with 04, 07, 09, 12, 15, 19, 22, 24, 27, and 31 prestressing steel strands
- Helix and additional reinforcement in the region of the anchorage
- Steel sheaths or plastic ducts
- Corrosion protection for tensile elements, couplers, and anchorages

PT system

1.2 Designation and range of anchorages and couplers

1.2.1 Designation

End anchorage e.g. S A C CONA CMI 1906-150 1860

Fixed (F) or stressing (S)

Anchor head (A)

Optional tendon use
None ( ), Cryogenic (C), Electrically Isolated Tendon (E)

Designation of the tendon
with information on number, cross-sectional area, and characteristic tensile strength of the strands

electronic copy

Coupler e.g. F K C CONA CMI 1906-150 1860

Fixed (F), stressing (S), or movable (B)

Coupler anchor head (K or H)

Optional tendon use
None ( ), Cryogenic (C), Electrically Isolated Tendon (E)

Designation of the tendon
with information on number, cross-sectional area, and characteristic tensile strength of the strands

1.2.2 Anchorage

Anchorage of prestressing steel strands is achieved by wedges and anchor heads, see Annex 1 and Annex 3. The anchor heads A of the stressing and fixed anchorages are identical. A differentiation is needed for the construction works.

The wedges of inaccessible fixed anchors are secured with either a wedge retaining plate or springs and a wedge retaining plate. An alternative is pre-locking each individual strand with ~ 0.5 · F_{pk} and applying a wedge retaining plate.

Where

F_{pk} .....N.....Characteristic value of maximum force of single strand

1.2.3 Fixed and stressing coupler

1.2.3.1 General

The prestressing force at the second construction stage may not be greater than that at the first construction stage, neither during construction, nor in the final state, nor due to any load combination.

1.2.3.2 Single plane coupler, FK, SK

The coupling is achieved by means of a coupler anchor head K, see Annex 2 and Annex 3. The prestressing steel strands of the first construction stage are anchored by means of wedges in machined cones, drilled in parallel. The arrangement of the cones of the first construction stage is identical to that of the anchor heads A of the stressing and fixed anchorages. The prestressing steel strands of the second construction stage are anchored in a circle around the cones of the first construction stage by means of wedges in machined cones, drilled at an inclination of 7 °. The wedges for the second construction stage are secured by holding springs and a cover plate.

1.2.3.3 Sleeve coupler FH and SH

The coupler anchor head H, see Annex 2 and Annex 4, is of the same basic geometry as the anchor head A of the fixed and stressing anchors. Compared to the anchor head A of the fixed and stressing anchors, the coupler anchor head H is deeper and provide an external thread for the coupler sleeve H.

The connection between the coupler anchor heads H of the first and second construction stages is achieved by means of a coupler sleeve H.

electronic copy electronic copy electronic copy electronic copy electronic copy electronic copy

1.2.4 Movable coupler BK und BH

The movable coupler, see Annex 2, is either a single plane coupler or a sleeve coupler in a coupler sheathing made of steel or plastic. Length and position of coupler sheathing are for the expected elongation displacement, see Clause 2.2.4.1.

The coupler anchor heads and the coupler sleeves of the movable couplers are identical to the coupler anchor heads and the coupler sleeves of the fixed and stressing couplers.

A 100 mm long and at least 3.5 mm thick PE-HD insert is installed at the deviating point at the end of the trumpet. The insert is not required for plastic trumpets where the ducts are slipped over the plastic trumpets.

1.2.5 Encapsulated and electrically isolated tendon

Encapsulated and electrically isolated tendons, see Annex 1 and Annex 2, comprise the following components.

- Anchorages according to Clause 1.2.2,
- Fixed or stressing couplers according to Clause 1.2.3.3,
- Steel ring E, see Annex 7,
- Isolation ring E for electrically isolated tendons only, see Annex 7,
- Bearing trumplate E, see Annex 7,
- Trumpet E and BBR VT Plastic Duct, see Annex 7, Annex 8, and Annex 9 and
- Protection cap E, see Annex 7.

Trumpet E continues through bearing trumplate E up to the steel ring. For electrically isolated tendon, the isolation ring is placed between bearing trumplate E and the steel ring. The steel ring supports the anchor head A. Protection cap E encases the anchorage and provides a port as inlet or vent that is sealed with a plug. Trumpet and BBR VT Plastic Duct are jointed with heat shrinking sleeve.

Thereby, the complete tendon, including prestressing steel strands, couplers, and anchorages, is fully encapsulated.

With electrically isolated tendon, the complete tendon, including prestressing steel strands, couplers, and anchorages, is fully encased with insulation material. The integrity of the electrical isolation can be verified and monitored via electrical resistance measurements between tendon and reinforcement of the structure.

1.2.6 Layout of the anchorage recess

All bearing trumplates, anchor heads, and coupler heads are placed perpendicular to the axis of the tendon, see Annex 23.

The dimensions of the anchorage recess are adapted to the prestressing jack used. The ETA holder saves for reference information on the minimum dimensions of the anchorage recess.

The formwork for the anchorage recess should be slightly conical for ease of removal. In case of anchorage fully embedded in concrete, the recess is designed so as to permit a reinforced concrete cover with the required dimensions and in any case with a thickness of at least 20 mm. In case of exposed anchorage, concrete cover of anchorage and bearing trumplate is not required. However, the exposed surfaces of bearing trumplate and steel cap are provided with corrosion protection.

Member of EOTA

electronic copy

1.3 Designation and range of the tendons

1.3.1 Designation

Tendon e.g. CONA CMI 19 06-150 1860

Internal PT with bond

Number of strands (04 to 31)

Strand

Cross-sectional area of strands (140 or 150 mm^2)

Characteristic tensile strength of strands

The tendons comprise 04 to 31 tensile elements, 7-wire prestressing steel strands according to Annex 11.

1.3.2 Range

1.3.2.1 General

Prestressing and overstressing forces are given in the corresponding standards and regulations in force at the place of use. The maximum prestressing and overstressing forces according to Eurocode 2 are listed in Annex 13.

The tendons consist of 04, 07, 09, 12, 15, 19, 22, 24, 27, or 31 prestressing steel strands. By omitting prestressing steel strands in the anchorages and couplers in a radially symmetrical way, also tendons with numbers of prestressing steel strands lying between the numbers given above can be installed. Any unnecessary hole either remains undrilled or is provided with a short piece of strand and a wedge is inserted. For coupler anchor head K the cones of the outer pitch circle, second construction stage, may be equally redistributed if prestressing steel strands are omitted. However, the overall dimensions of the coupler anchor head K remain unchanged.

With regard to dimensions and reinforcement, anchorages and couplers with omitted prestressing steel strands remains unchanged compared to anchorages and couplers with a full number of prestressing steel strands.

1.3.2.2 CONA CMI n06-140

7-wire prestressing steel strand

Nominal diameter .....15.3 mm

Nominal cross-sectional area ..... 140 mm^2

Maximum characteristic tensile strength.....1 860 MPa

Annex 12 lists the available tendon range for CONA CMI n06-140.

1.3.2.3 CONA CMI n06-150

7-wire prestressing steel strand

Nominal diameter .....15.7 mm

Nominal cross-sectional area ..... 150 mm^2

Maximum characteristic tensile strength.....1 860 MPa

Annex 12 lists the available tendon range for CONA CMI n06-150.

electronic copy

1.4 Sheaths

1.4.1 General

Corrugated ducts are either in steel or plastic. For special applications such as loop tendons, smooth steel ducts can be used.

1.4.2 Degree of filling, f

The degree of filling, f, generally is between 0.35 and 0.50. However, smaller values of degree of filling, 0.35 to 0.40, are used for long tendons or if the tensile elements are installed after concreting. The minimum radius of curvature can be obtained with the equation given in Clause 1.9. In Annex 14 and Annex 15 the degree of filling and corresponding minimum radius of curvature are given. The degree of filling is defined as

$$f = \frac{\text{cross-sectional area of prestressing steel}}{\text{cross-sectional area of inner diameter of sheath}}$$

Where

f ..... — ..... Degree of filling

1.4.3 Steel strip sheaths

Sheaths are in conformity with EN 523[2]. The degree of filling, f, is according to Clause 1.4.2 and the minimum radius of curvature to Clause 1.9.

Inner diameter of sheath and corresponding minimum radii of curvature, R_{min}, are given in Annex 14 in which $p_{R,\,max}$ has been set to 200 kN/m and 140 kN/m respectively. Smaller radii of curvature are acceptable according to the respective standards and regulations in force at the place of use.

The larger inner diameter of sheaths should be selected in the case of long tendons, > 80 m, or if the tensile elements are installed after concreting.

1.4.4 Plastic ducts

The BBR VT Plastic Ducts are circular and flat ducts made of polypropylene according to Annex 26 with toroidal corrugations. The main dimensions of circular plastic ducts, designation 50 to 130, and flat plastic ducts are given in Annex 8 and Annex 9, respectively. These ducts are required for fully encapsulated tendons, i.e. PL2[3], as well as electrically isolated tendons, i.e. PL3[3].

Couplers to joint sections of plastic ducts and connections to trumpets of anchorages, see Annex 8 and Annex 9 are made with heat shrinking sleeves. For supporting the plastic ducts during installation, in general, no specific stiffeners are required. However, the use of rigid half-shells, see Annex 6, between duct and its supports at all high points along the tendon path is recommended for fully encapsulated as well as electrically isolated tendons in order to efficiently reduce the risk of perforation during stressing.

Inner diameter of duct and corresponding minimum radii of curvature, R_{min}, are given in Annex 15 and Annex 16 for ambient and high temperature. The minimum radii of curvature at high temperatures are applied, if the temperature of concrete next to the plastic duct is expected to be at or exceeds 37 °C at the time of stressing operations.

The performance of BBR VT Plastic Ducts has been verified according to fib bulletin 7 for a temperature range of – 20 °C to + 50 °C.

---

[2] Standards and other documents referred to in the European Technical Assessment are listed in Annex 31 and Annex 32.

[3] PL2 and PL3 are protection levels according to fib bulletin 33.

electronic copy electronic copy electronic copy electronic copy electronic copy electronic copy

Alternatively, also other corrugated plastic ducts may be used, if permitted at the place of use as well as accepted by the relevant local authority and the ETA holder.

1.4.5 Pre-bent smooth circular steel ducts

If permitted at the place of use, smooth steel ducts according to EN 10255, EN 10216-1, EN 10217-1, EN 10219-1, or EN 10305-5 can be used. The degree of filling, f, conforms to Clause 1.4.2 and the minimum radius of curvature to Clause 1.9. The ducts are pre-bent and free of any kinks. The minimum wall thickness of the steel ducts meets the specification of Table 2.

Table 2 Steel ducts, minimum wall thickness, t_{min}

Number of strands n	**Minimum wall thickness t_{min}**
—	mm
02–13	1.5
15–25	2.0
27–31	2.5

1.5 Friction losses

For the calculation of loss of prestressing force due to friction, Coulomb's law applies. Calculation of friction loss is by the equation

$$F_x = F_0 \cdot e^{-\mu \cdot (\alpha + k \cdot x)}$$

Where

F_x .....kN .....Prestressing force at a distance x along the tendon

F_0 .....kN .....Prestressing force at x = 0 m

μ ..... rad^{-1}.....Friction coefficient, see Table 3

α ..... rad.....Sum of the angular displacements over the distance x, irrespective of direction or sign

k ..... rad/m.....Wobble coefficient, see Table 3

x ..... m.....Distance along the tendon from the point where the prestressing force is equal to F_0

NOTE 1 rad = 1 m/m = 1

electronic copy electronic copy electronic copy electronic copy electronic copy electronic copy

Table 3 Friction parameters

Duct	Recommended values		Range of values	
	μ	k	μ	k
—	rad^{-1}	rad/m	rad^{-1}	rad/m
Steel strip sheath	0.18	0.005	0.17–0.19	0.004–0.007
Smooth steel duct	0.18		0.16–0.24	
Corrugated plastic duct	0.12		0.10–0.14	
Smooth plastic duct	0.12		0.10–0.14	

NOTE As far as acceptable at the place of use, due to special measures like oiling or for a tendon layout with only few deviations this value can be reduced by 10 to 20 %. Compared to e.g. the use of prestressing steel or sheaths with a film of rust this value increases by more than 100 %.

Table 4 Friction losses in anchorage

Tendon	ΔF_s
—	%
CONA CMI 0406	1.2
CONA CMI 0706	1.1
CONA CMI 0906	1.0
CONA CMI 1206 to 3106	0.9

Where

ΔF_s..... %.....Friction loss in anchorages and first construction stage of fixed couplers. This is taken into account for determination of elongation and prestressing force along the tendon.

1.6 Support of tendons

Spacing of supports of steel strip sheaths and smooth steel ducts is between 1.0 m and 1.8 m. In the region of tendon curvatures a spacing of 0.8 m, or 0.6 m in case the radius of curvature is smaller than 4.0 m, is applied. For corrugated plastic ducts spacing of supports should be 0.6 m to 1.0 m for sizes 50 to 85 mm and 0.8 m, or 0.6 m as stated above, to 1.4 m for sizes 100 to 130 mm.

The tendons are systematically fastened in their position so that they are not displaced by placing and compacting the concrete.

Member of EOTA

electronic copy electronic copy electronic copy electronic copy electronic copy electronic copy

1.7 Slip at anchorages and couplers

Slip at stressing anchorages, at fixed anchorages, and at fixed couplers, first and second construction stages, is 6 mm. Slip at moveable couplers is twice this amount. At stressing anchorage and at first construction stage of fixed couplers the slip is 4 mm, provided a prestressing jack with a wedge system and a wedging force of around 25 kN per strand is used.

1.8 Centre spacing and edge distance for anchorages

In general, spacing and distances are not less than given in Annex 17, Annex 18, Annex 19, Annex 20, and Annex 21. However, centre spacing of tendon anchorages may be reduced in one direction by up to 15 %, but not smaller than the outside diameter of the helix and placing of additional reinforcement is still possible. In this case centre spacing in the perpendicular direction is increased by the same percentage, see also Annex 22. The corresponding edge distances are calculated by

$$a_e = \frac{a_c}{2} - 10\ \text{mm} + c$$

$$b_e = \frac{b_c}{2} - 10\ \text{mm} + c$$

Where

a_c .....mm .....Centre spacing

b_c .....mm .....Centre spacing in the direction perpendicular to a_c

a_e .....mm .....Edge distance

b_e .....mm .....Edge distance in the direction perpendicular to a_e

c .....mm .....Concrete cover

The minimum values for a_c, b_c, a_e, and b_e are given in Annex 17, Annex 18, Annex 19, Annex 20, and Annex 21.

Standards and regulations on concrete cover in force at the place of use are observed.

1.9 Minimum radii of curvature

The minimum radii of curvature for tendons, R_{min}, are given in Annex 14, Annex 15, and Annex 16. Minimum radii of curvature for steel strip sheath correspond to

- a prestressing force of the tendon of $F_{pm,\,0} = 0.85 \cdot n \cdot F_{p0.1}$
- a nominal diameter of the prestressing steel strand Y1860S7 of d = 15.7 mm
- a maximum pressure under the prestressing steel strands of $p_{R,\,max}$ = 140 kN/m and 200 kN/m
- a concrete compressive strength of $f_{cm,\,0,\,cube}$ = 23 MPa.

In case of different tendon parameters or a different pressure under the prestressing steel strands, calculation of minimum radii of curvature of the tendon with circular sheaths can be carried out using the equation

$$R_{min} = \max \begin{cases} \dfrac{2 \cdot F_{pm,\,0} \cdot d}{d_i \cdot p_{R,\,max}} \\ \text{and} \\ \dfrac{400 \cdot d}{3\,000} \end{cases}$$

Where

R_{min} ..... m.....Minimum radii of curvature

electronic copy electronic copy electronic copy electronic copy electronic copy electronic copy

$F_{pm,\,0}$ .....kN .....Prestressing force of the tendon

$F_{p0.1}$.....kN .....Characteristic force at 0.1 % proof force of one single prestressing steel strand, see Annex 11

$p_{R,\,max}$ ..kN/m .....Maximum design pressure under the prestressing steel strands

d .....mm .....Nominal diameter of the prestresing steel strand

d_i.....mm .....Nominal inner diameter of duct

n ..... —.....Number of prestressing steel strands

For tendons with predominantly static loading, reduced minimum radii of curvature can be used. Recommended values for the pressure under the prestressing steel strands are

$p_{R,\,max}$ = 140–200 kN/m for internal bonded tendons

$p_{R,\,max}$ = 800 kN/m for smooth steel duct and predominantly static loading

In case of reduced minimum radii of curvature, the degree of filling, f, as defined in Clause 1.4.2, is between 0.25 and 0.3 to allow for proper tendon installation. Depending on the concrete strength at the time of stressing, additional reinforcement for splitting forces may be required in the areas of reduced minimum radii of curvature.

Standards and regulations on minimum radii of curvature or on the pressure under the prestressing steel strands in force at the place of use are observed.

1.10 Concrete strength at time of stressing

Concrete in conformity with EN 206 is used.

At the time of stressing the mean concrete compressive strength, $f_{cm,\,0}$, is at least according to Table 5. The concrete test specimens are subjected to the same hardening conditions as the structure.

For partial stressing with 30 % of the full prestressing force, the actual mean value of concrete compressive strength is at least $0.5 \cdot f_{cm,\,0,\,cube}$ or $0.5 \cdot f_{cm,\,0,\,cylinder}$. Intermediate values may be interpolated linearly according to Eurocode 2.

Table 5 Compressive strength of concrete

Specimen for testing			**Mean concrete strength $f_{cm,\,0}$**				
Cube strength, 150 mm cube	$f_{cm,\,0,\,cube}$	MPa	23	28	34	38	43
Cylinder strength, 150 mm cylinder diameter	$f_{cm,\,0,\,cylinder}$	MPa	19	23	28	31	35

Helix, additional reinforcement, centre spacing, and edge distance corresponding to the concrete compressive strengths are taken from Annex 18, Annex 19, Annex 20, and Annex 21, see also the Clauses 1.12.7 and 2.2.3.4.

electronic copy

Components

1.11 Prestressing steel strands

Only 7-wire prestressing steel strands with characteristics according to Table 6 are used, see also Annex 11.

Table 6 Prestressing steel strands

Maximum characteristic tensile strength	f_{pk}	MPa	1 860	
Nominal diameter	d	mm	15.3	15.7
Nominal cross-sectional area	A_p	mm^2	140	150
Mass of prestressing steel	M	kg/m	1.093	1.172

In a single tendon, only prestressing steel strands spun in the same direction are used.

In the course of preparing the European Technical Assessment no characteristic has been assessed for the prestressing steel strands. In execution, a suitable prestressing steel strand that conforms to Annex 11 and is according to the standards and regulations in force at the place of use is taken.

1.12 Anchorage and coupler

1.12.1 General

The components of anchorages and couplers are in conformity with the specifications given in Annex 3, Annex 4, Annex 5, Annex 6, and Annex 7 and the technical file[4]. Therein the component dimensions, materials, and material identification data with tolerances are given.

1.12.2 Anchor head

The anchor head A is made of steel and provides regularly arranged conical holes, drilled in parallel, to accommodate prestressing steel strands and wedges, see Annex 3. In addition, threaded bores may be provided to attach grouting cap or protection cap and the respective wedge retaining plate. At the back of the anchor head A there may be a step for ease of centring the anchor head A on bearing trumplates A or E or on steel ring E.

1.12.3 Bearing trumplate

The bearing trumplate made of cast iron transmits the force via 3 anchorage planes to the concrete. Air-vents are situated at the top and at the interface plane to the anchor head. A ventilation tube can be fitted to these air-vents. On the tendon sided end there is an inner thread to take the trumpet.

The bearing trumplate used in tendons for cryogenic applications is made of spheroidal graphite cast iron, i.e. ductile cast iron.

There are two bearing trumplates. Firstly, bearing trumplate A with trumpet A, see Annex 4, and secondly, bearing trumplate E, see Annex 7, for encapsulated and electrically isolated tendons with trumpet E.

1.12.4 Trumpets

The conical trumpets A, K, and F, see Annex 5, are made either in steel or in PE.

[4] The technical file of the European Technical Assessment is deposited at Österreichisches Institut für Bautechnik.

electronic copy electronic copy electronic copy electronic copy electronic copy electronic copy

The trumpets manufactured in steel have a corrugated or plain surface. In case the transition from trumpet to duct is made in steel, a 100 mm long and at least 3.5 mm thick PE-HD insert is installed at the deviating point of the prestressing steel strands.

The conical trumpets made of PE may have either a corrugated or a plain surface. At the duct-side end there is a radius for the deviation of the prestressing steel strands and a smooth surface, to ensure a good transition to the duct. The opposite end is connected to the bearing trumplate.

The conical trumpets E, see Annex 7, are made of PP or PE and have a similar conical geometry as trumpet A.

1.12.5 Coupler anchor head K and H

The coupler anchor head K, see Annex 3, for the single plane coupler is made of steel and provides in the inner part for anchorage the prestressing steel strands of the first construction stage the same arrangement of holes as the anchor head A for the stressing or fixed anchorage. In the outer pitch circle there is an arrangement of holes with an inclination of 7 ° to accommodate the prestressing steel strands of the second construction stage. A cover plate is fastened by means of additional threaded bores.

Coupler anchor head H, see Annex 4, for the sleeve coupler H is made of steel and has the same basic geometry as anchor heads A of the stressing or fixed anchorage. Compared to anchor head A of the fixed and stressing anchor, the coupler anchor head H is deeper and provides an external thread for coupler sleeve H. Wedge retaining plate H is fastened by means of additional threaded bores.

The coupler sleeve H is a steel tube with an inner thread and provided with ventilation holes.

At the back of coupler anchor heads K and H there is a step for ease of centring the coupler anchor head on bearing trumplates A or E or on steel ring E.

1.12.6 Ring wedges

The ring wedges, see Annex 3, are in either two pieces or three pieces. Four different ring wedges are used.

- Ring wedge H in three pieces, fitted with spring ring, is available in two different materials
- Ring wedge F in three pieces, without spring ring or fitted with spring ring
- Ring wedge Z in two pieces, without spring ring or fitted with spring ring

Within one anchorage or coupler, only one of these ring wedges is used.

In the case of fixed anchors and couplers, the wedges are held in place by a wedge retaining plate, by springs with a wedge retaining plate, or by springs with a cover plate. An alternative is pre-locking each individual strand with ~ 0.5 · F_{pk} and applying a wedge retaining plate as per Clause 1.2.2.

Where

F_{pk} .....N.....Characteristic value of maximum force of one single strand

1.12.7 Helix and additional reinforcement

Helix and additional reinforcement are made of ribbed reinforcing steel. The end of the helix on the anchorage side is welded to the next turn. The helix is placed exactly in the tendon axis. The helix dimensions conform to the values specified in Annex 18, Annex 19, Annex 20, and Annex 21.

If required for a specific project design, the reinforcement given in Annex 18, Annex 19, Annex 20, and Annex 21 may be modified in accordance with the respective regulations in force

Member of EOTA

electronic copy electronic copy electronic copy electronic copy electronic copy electronic copy

at the place of use as well as with the relevant approval of the local authority and of the ETA holder to provide equivalent performance.

1.12.8 Caps

1.12.8.1 General

Recessed and exposed anchorages without ventilated protection caps or grouting caps are not executed. All inaccessible or accessible fixed anchorages FA are equipped with protection caps or grouting caps to ensure a fully continuous corrosion protection of the tendon from all wedges of the one end to all wedges of the other end.

1.12.8.2 Grouting cap

The grouting cap A, shown in Annex 1, Annex 2, and Annex 6, is for stressing anchorage SA, accessible fixed anchorage FA and fixed and stressing coupler FK and SK. It is provided with an air-vent and attached to the anchor head A with screws. The grouting cap A is a permanent UV-protected plastic cap that resists a grouting pressure up to maximum 1 500 kPa. The cap is for one-time use and left in place after grouting. The anchorage recess is completed with concrete to provide a concrete cover as required, at least with a thickness of 20 mm at the grouting cap A.

Alternatively, the anchorage recess is not completed with concrete. However, in this case exposed surfaces of steel or cast iron components are provided with corrosion protection.

1.12.8.3 Protection caps

The protection caps A and E, shown in Annex 1, Annex 6, and Annex 7, are provided with an air-vent and attached to the anchorage with screws or threaded rods. The protection caps are permanent and cap A made of steel or plastic and cap E is made of plastic only.

- Protection cap A in steel fully encases anchor head A with ring wedges and is left in place after grouting. The permanent steel cap is used for inaccessible and accessible fixed anchorages FA.
- Protection cap A in plastic, see Annex 6, is a permanent UV-protected plastic cap that fully encases anchor head and ring wedges. The cap is permanent and for one-time use only. The protection cap is used for inaccessible and accessible fixed anchorages FA.
- Protection cap E in plastic, see Annex 7, is a permanent UV-protected plastic cap that fully encases anchor head and ring wedges. The cap is permanent and for one-time use only. Protection cap E is used for fully encapsulated and electrically isolated tendons. In particular, it is attached to electrically isolated inaccessible and accessible fixed anchorages FAE and stressing anchorages SAE. After grouting all inlet and outlet ports of the electrically isolated tendon are sealed with suitable plugs to provide fully electrically isolation.

1.12.9 Accessories for inlets and outlets

Grouting accessories, see Annex 6, are made of plastic and are available for inlets and outlets to facilitate grouting of the tendons and thus ensure permanent corrosion protection by means of cement grout.

1.13 Sheaths

1.13.1 Steel strip sheaths

The sheaths are in conformity with the specifications given in Annex 10.

electronic copy

1.13.2 Plastic ducts

The plastic ducts are in conformity with the specifications given in Annex 8, Annex 9, Annex 10, and Annex 26.

1.14 Material specifications

In Annex 10 the material specifications of the components are given.

1.15 Permanent corrosion protection

1.15.1 General

In the course of preparing the European Technical Assessment, no characteristic has been assessed for components and materials of the corrosion protection system, except plastic ducts, see the Clauses 1.4.4 and 1.13.2. In execution, all components or materials are selected according to the standards and regulations in force at the place of use. In the absent of such standards or regulations, components and materials in accordance with ETAG 013 are deemed as acceptable.

1.15.2 Grout

The sheaths, anchorages, and couplers are completely filled with grout according to EN 447 to protect the tendons from corrosion and to provide bond between the tendons and the structure.

2 Specification of the intended uses in accordance with the applicable European Assessment Document (hereinafter EAD)

2.1 Intended uses

The PT system is intended to be used for the prestressing of structures. The specific intended uses are listed in Table 7.

Table 7 Intended uses

Line №	Use category
Use categories according to tendon configuration and material of structure	
1	Internal bonded tendon for concrete and composite structures
2	For special structures according to Eurocode 2 and Eurocode 4
Optional use categories	
3	Tendon for cryogenic applications
4	Internal bonded tendon with plastic duct
5	Encapsulated tendon
6	Electrically isolated tendon
7	Tendon for use in structural masonry construction as internal tendon

electronic copy electronic copy electronic copy electronic copy electronic copy electronic copy

2.2 Assumptions

2.2.1 General

Concerning product packaging, transport, storage, maintenance, replacement, and repair it is the responsibility of the manufacturer to undertake the appropriate measures and to advise his clients on transport, storage, maintenance, replacement, and repair of the product, as he considers necessary.

2.2.2 Packaging, transport, and storage

Advice on packaging, transport, and storage includes.

- During transport of prefabricated tendons, a minimum diameter of curvature of 1.6 m for tendons up to CONA CMI 1506 and 1.70 m for larger tendons is observed.
- Temporary protection of prestressing steel and components in order to prevent corrosion during transport from production site to job site
- Transportation, storage, and handling of prestressing steel and other components in a manner as to avoid damage by mechanical or chemical impact
- Protection of prestressing steel and other components from moisture
- Keeping tensile elements separate from areas where welding operations are performed

2.2.3 Design

2.2.3.1 General

It is the responsibility of the ETA holder to ensure that all necessary information on design and installation is submitted to those responsible for design and execution of the structures executed with "BBR VT CONA CMI – Bonded Post-tensioning System with 04 to 31 Strands".

Design of the structure permits correct installation and stressing of the tendons. The reinforcement in the anchorage zone permits correct placing and compacting of concrete.

2.2.3.2 Anchorage Recess

Clearance is required for handling of prestressing jacks and for stressing. The dimensions of the anchorage recess are adapted to the prestressing jack used. The ETA holder keeps available information on prestressing jacks and appropriate clearance behind the anchorage.

The anchorage recess is designed with such dimensions as to ensure the required concrete cover and at least 20 mm at the protection cap in the final state.

2.2.3.3 Maximum prestressing force

The prestressing and overstressing forces are specified in the respective standards and regulations in force at the place of use. Annex 13 lists the maximum prestressing and overstressing forces according to Eurocode 2.

2.2.3.4 Reinforcement in the anchorage zone

Helix and additional reinforcement given in Annex 18, Annex 19, Annex 20, and Annex 21 are adopted.

Verification of transfer of prestressing forces to structural concrete is not required if centre spacing and edge distances of the tendons as well as grade and dimensions of additional reinforcement, see Annex 18, Annex 19, Annex 20, and Annex 21, are conformed to. In the case of grouped anchorages, the additional reinforcement of the individual anchorages can be combined, provided appropriate anchorage is ensured. However, number, cross-sectional area and position with respect to the bearing trumplates remains unchanged.

electronic copy

The reinforcement of the structure is not employed as additional reinforcement. Reinforcement exceeding the required reinforcement of the structure may be used as additional reinforcement, provided appropriate placing is possible.

The forces outside the area of the additional reinforcement are verified and, if necessary, dealt with by appropriate reinforcement.

If required for a specific project design, the reinforcement given in Annex 18, Annex 19, Annex 20, and Annex 21 may be modified in accordance with the respective regulations in force at the place of use as well as with the relevant approval of the local authority and of the ETA holder to provide equivalent performance.

2.2.3.5 Tendons in masonry structures – Load transfer to the structure

Load transfer of prestressing force to masonry structures is via concrete or steel members designed according to the European Technical Assessment, in particular according to the Clauses 1.8, 1.10, 1.12.7, and 2.2.3.4 or Eurocode 3 respectively.

The concrete or steel members have such dimensions as to permit a force of $1.1 \cdot F_{pk}$ being transferred into the masonry. The verification is performed according to Eurocode 6 as well as to the respective standards and regulations in force at the place of use.

2.2.4 Installation

2.2.4.1 General

Assembly and installation of tendons are only carried out by qualified PT specialist companies with the required resources and experience in the use of multi strand bonded post-tensioning systems, see ETAG 013, Annex D.1 and CWA 14646. The respective standards and regulations in force at the place of use are considered. The company's PT site manager has a certificate, stating that she or he has been trained by the ETA holder and that she or he possesses the necessary qualifications and experience with the "BBR VT CONA CMI – Bonded Post-tensioning System with 04 to 31 Strands".

Bearing trumplate, anchor head, and coupler anchor head are placed perpendicular to the tendon's axis.

Couplers are situated in a straight tendon section.

At the anchorages and couplers the tendon layout provides a straight section over a length of at least 250 mm beyond the end of the trumpet. In case of tendons with a minimum or reduced radius of curvature after the trumpet, the following minimum straight lengths after the end of trumpet are recommended.

- Degree of filling $0.35 \leq f \leq 0.50$, minimum straight length = $5 \cdot d_i \geq 250$ mm
- Degree of filling $0.25 \leq f \leq 0.30$, minimum straight length = $8 \cdot d_i \geq 400$ mm

Where

f..... —..... Degree of filling

d_i ..... mm..... Nominal inner diameter of duct

Installation is carried out according to Annex 24 and Annex 25.

Before placing the concrete, a final check of the installed tendons or sheaths is carried out.

In the case of the single plane coupler K, the prestressing steel strands are provided with markers to be able to check the depth of engagement.

In case of a movable coupler, it is ensured by means of corresponding position and of length of the coupler sheath, that in the area of coupler sheath and corresponding trumpet area a

electronic copy

displacement of the movable coupler of at least $1.15 \cdot \Delta l + 30$ mm is possible without any hindrance, where Δl is the maximum expected displacement of the coupler at stressing.

2.2.4.2 Stressing operation

With a mean concrete compressive strength in the anchorage zone according to the values laid down in Annex 18, Annex 19, Annex 20, and Annex 21 full prestressing may be applied.

Stressing and, if applicable, wedging is carried out using a suitable prestressing jack. The wedging force corresponds to approximately 25 kN per wedge.

Elongation and prestressing forces are continuously checked during the stressing operation. The results of the stressing operation are recorded and the measured elongations compared with the prior calculated values.

After releasing the prestressing force from the prestressing jack, the tendon pulls the prestressing steel strands by the amount of the slip into the anchor head.

Information on the prestressing equipment has been submitted to Österreichisches Institut für Bautechnik. The ETA holder keeps available information on prestressing jacks and appropriate clearance behind the anchorage.

The safety-at-work and health protection regulations shall be complied with.

2.2.4.3 Restressing

Restressing of tendons in combination with release and reuse of wedges is permitted, whereas the wedges bite into a least 15 mm of virgin strand surface and no wedge bite remains inside the final length of the tendon between anchorages.

2.2.4.4 Grouting

Grouting accessories such as inlets, outlets, caps, vents, etc. require compatibility with the PT system and provide sufficient tightness. Grouting caps or protection caps are always used to ensure proper grouting of tendon and to avoid voids around the wedges. Grout is injected through the inlet holes until it escapes from the outlet tubes with the same consistency. To avoid voids in the hardened grout special measures are applied for long tendons, tendon paths with distinct high points or inclined tendons. All vents and grouting inlets are sealed immediately after grouting. In case of K-couplers, the holes of the second stage, together with wedges and springs are checked for cleanness before and immediately after grouting the first construction stage.

The standards, observed for cement grouting in prestressing ducts, are EN 445, EN 446, and EN 447 or the standards and regulations in force at the place of use applies for ready mixed grout.

The results of the grouting operation are recorded in the grouting records.

2.2.4.5 Welding

Ducts may be welded.

The helix may be welded to the bearing trumplate to secure its position.

After installation of the tendons, no further welding operations are carried out on the tendons. In case of welding operations near tendons, precautionary measures are required to avoid damage. However, plastic components may be welded even after installation of the tendons.

2.3 Assumed working life

The European Technical Assessment is based on an assumed working life of the BBR VT CONA CMI – Bonded Post-tensioning System with 04 to 31 Strands of 100 years, provided that the BBR VT CONA CMI – Bonded Post-tensioning System with 04 to 31 Strands is subject to appropriate

electronic copy electronic copy electronic copy electronic copy electronic copy electronic copy

installation, use, and maintenance, see Clause 2.2. These provisions are based upon the current state of the art and the available knowledge and experience.

In normal use conditions, the real working life may be considerably longer without major degradation affecting the basic requirements for construction works[5].

The indications given as to the working life of the construction product cannot be interpreted as a guarantee, neither given by the product manufacturer or his representative nor by EOTA nor by the Technical Assessment Body, but are regarded only as a means for expressing the expected economically reasonable working life of the product.

3 Performance of the product and references to the methods used for its assessment

3.1 Essential characteristics

The performances of the PT system for the essential characteristics are given in Table 8 and Table 9. In Annex 30, the combinations of essential characteristics and corresponding intended uses are listed.

Table 8 Essential characteristics and performances of the product

№	Essential characteristic	Product performance
Product BBR VT CONA CMI – Bonded Post-tensioning System with 04 to 31 Strands Intended use The PT system is intended to be used for the prestressing of structures, Clause 2.1, Table 7, lines № 1 and 2.		
Basic requirement for construction works 1: Mechanical resistance and stability		
1	Resistance to static load	See Clause 3.2.1.1.
2	Resistance to fatigue	See Clause 3.2.1.2.
3	Load transfer to the structure	See Clause 3.2.1.3.
4	Friction coefficient	See Clause 3.2.1.4.
5	Deviation, deflection (limits)	See Clause 3.2.1.5.
6	Practicability, reliability of installation	See Clause 3.2.1.6.
Basic requirement for construction works 2: Safety in case of fire		
—	Not relevant. No characteristic assessed.	—
Basic requirement for construction works 3: Hygiene, health, and the environment		
7	Content, emission, and/or release, of dangerous substances	See Clause 3.2.2.

[5] The real working life of a product incorporated in a specific works depends on the environmental conditions to which that works are subject, as well as on the particular conditions of design, execution, use, and maintenance of that works. Therefore, it cannot be excluded that in certain cases the real working life of the product may also be shorter than the assumed working life.

electronic copy electronic copy electronic copy electronic copy electronic copy electronic copy

№	Essential characteristic	Product performance
Basic requirement for construction works 4: Safety and accessibility in use		
—	Not relevant. No characteristic assessed.	—
Basic requirement for construction works 5: Protection against noise		
—	Not relevant. No characteristic assessed.	—
Basic requirement for construction works 6: Energy economy and heat retention		
—	Not relevant. No characteristic assessed.	—
Basic requirement for construction works 7: Sustainable use of natural resources		
—	No characteristic assessed.	—
Related aspects of serviceability		
8	Related aspects of serviceability	See Clause 3.2.3.

Table 9 Essential characteristics and performances of the product in addition to Table 8 for optional use categories

№	Additional essential characteristic	Product performance
Product BBR VT CONA CMI – Bonded Post-tensioning System with 04 to 31 Strands Optional use category Clause 2.1, Table 7, line № 3, Tendon for cryogenic applications		
Basic requirement for construction works 1: Mechanical resistance and stability		
9	Resistance to static load under cryogenic conditions	See Clause 3.2.4.1.
Optional use category Clause 2.1, Table 7, line № 4, Internal bonded with plastic duct		
Basic requirement for construction works 1: Mechanical resistance and stability		
10	Practicability, reliability of installation	See Clause 3.2.4.2.
Optional use category Clause 2.1, Table 7, line № 5, Encapsulated tendon		
Basic requirement for construction works 1: Mechanical resistance and stability		
11	Practicability, reliability of installation	See Clause 3.2.4.3.

electronic copy

№	Additional essential characteristic	Product performance
Optional use category Clause 2.1, Table 7, line № 6, Electrically isolated tendon		
Basic requirement for construction works 1: Mechanical resistance and stability		
12	Practicability, reliability of installation	See Clause 3.2.4.4.
Optional use category Clause 2.1, Table 7, line № 7, Tendon for use in structural masonry construction as internal tendon		
Basic requirement for construction works 1: Mechanical resistance and stability		
13	Load transfer to the structure	See Clause 3.2.4.5.

3.2 Product performance

3.2.1 Mechanical resistance and stability

3.2.1.1 Resistance to static load

The PT system as described in the ETA meets the acceptance criteria of ETAG 013, Clause 6.1.1-I. The characteristic values of maximum force, F_{pk}, of the tendon for prestressing steel strands according to Annex 11 are listed in Annex 12.

3.2.1.2 Resistance to fatigue

The PT system as described in the ETA meets the acceptance criteria of ETAG 013, Clause 6.1.2-I. The characteristic values of maximum force, F_{pk}, of the tendon for prestressing steel strands according to Annex 11 are listed in Annex 12.

3.2.1.3 Load transfer to the structure

The PT system as described in the ETA meets the acceptance criteria of ETAG 013, Clause 6.1.3-I. The characteristic values of maximum force, F_{pk}, of the tendon for prestressing steel strands according to Annex 11 are listed in Annex 12.

3.2.1.4 Friction coefficient

The PT system as described in the ETA meets the acceptance criteria of ETAG 013, Clause 6.1.4-I. For friction losses including friction coefficient see Clause 1.5.

3.2.1.5 Deviation, deflection (limits)

The PT system as described in the ETA meets the acceptance criteria of ETAG 013, Clause 6.1.5-I. For minimum radii of curvature see Clause 1.9.

3.2.1.6 Practicability, reliability of installation

The PT system as described in the ETA meets the acceptance criteria of ETAG 013, Clause 6.1.6-I.

3.2.2 Hygiene, health, and the environment

Content, emission, and/or release of dangerous substances is determined according to ETAG 013, Clause 5.3.1. No dangerous substances is the performance of the PT system in this respect. A manufacturer's declaration to this effect has been submitted.

electronic copy

NOTE In addition to specific clauses relating to dangerous substances in the European Technical Assessment, there may be other requirements applicable to the product falling within their scope, e.g. transposed European legislation and national laws, regulations and administrative provisions. These requirements also need to be complied with, when and where they apply.

3.2.3 Related aspects of serviceability

The PT system as described in the ETA meets the acceptance criteria of ETAG 013, Clause 6.7.

3.2.4 Mechanical resistance and stability

3.2.4.1 Resistance to static load under cryogenic conditions

Resistance to static load under cryogenic conditions has been verified on full tendon specimens including both PT end anchorages subjected to cryogenic conditions. The PT system as described in the ETA meets the acceptance criteria of ETAG 013, Clause 6.1.6-II(c) for cryogenic applications

- with anchorages and couplers outside the possible cryogenic zone and
- with anchorages and couplers inside the possible cryogenic zone.

The characteristic values of maximum force, F_{pk}, of the tendon for prestressing steel strands according to Annex 11 are listed in Annex 12.

3.2.4.2 Practicability, reliability of installation

For internal bonded tendons with plastic duct, the PT system as described in the ETA meets the acceptance criteria of ETAG 013, Clause 6.1.6-II(d).

3.2.4.3 Practicability, reliability of installation

For encapsulated tendons the PT system as described in the ETA meets the acceptance criteria of ETAG 013, Clause 6.1.6-II(e).

3.2.4.4 Practicability, reliability of installation

For electrically isolated tendons the PT system as described in the ETA meets the acceptance criteria of ETAG 013, Clause 6.1.6-II(f).

3.2.4.5 Tendons in masonry structures – Load transfer to the structure

For tendons for use in structural masonry construction as internal tendon, the PT system as described in the ETA meets the acceptance criteria of ETAG 013, Clause 6.1.3-II(h). See in particular Clause 2.2.3.5 for tendons in masonry structures. The characteristic values of maximum force, F_{pk}, of the tendon for prestressing steel strands according to Annex 11 are listed in Annex 12.

3.3 Assessment methods

The assessment of the essential characteristics in Clause 3.1, of the PT system, for the intended uses, and in relation to the requirements for mechanical resistance and stability, and for hygiene, health, and the environment in the sense of the basic requirements for construction works № 1 and 3 of Regulation (EU) № 305/2011, has been made in accordance with the Guideline for European technical approvals of “Post-Tensioning Kits for Prestressing of Structures”, ETAG 013, edition June 2002, used according to Article 66 (3) of Regulation (EU) № 305/2011 as European Assessment Document, based on the assessment for internal bonded PT systems.

electronic copy

3.4 Identification

The European Technical Assessment for the PT system is issued on the basis of agreed data[6] that identify the assessed product. Changes to materials, to composition, to characteristics of the product, or to the production process could result in these deposited data being incorrect. Österreichisches Institut für Bautechnik should be notified before the changes are introduced, as an amendment of the European Technical Assessment is possibly necessary.

4 Assessment and verification of constancy of performance (hereinafter AVCP) system applied, with reference to its legal base

4.1 System of assessment and verification of constancy of performance

According to Commission Decision 98/456/EC, the system of assessment and verification of constancy of performance to be applied to the PT system is System 1+. System 1+ is detailed in Commission Delegated Regulation (EU) № 568/2014 of 18 February 2014, Annex, point 1.1., and provides for the following items.

(a) The manufacturer shall carry out

- (i) factory production control;
- (ii) further testing of samples taken at the manufacturing plant by the manufacturer in accordance with the prescribed test plan[7].

(b) The notified product certification body shall decide on the issuing, restriction, suspension, or withdrawal of the certificate of constancy of performance of the construction product on the basis of the outcome of the following assessments and verifications carried out by that body

- (i) an assessment of the performance of the construction product carried out on the basis of testing (including sampling), calculation, tabulated values, or descriptive documentation of the product;
- (ii) initial inspection of the manufacturing plant and of factory production control;
- (iii) continuing surveillance, assessment, and evaluation of factory production control;
- (iv) audit-testing of samples taken by the notified product certification body at the manufacturing plant or at the manufacturer's storage facilities.

4.2 AVCP for construction products for which a European Technical Assessment has been issued

Notified bodies undertaking tasks under System 1+ shall consider the European Technical Assessment issued for the construction product in question as the assessment of the performance of that product. Notified bodies shall therefore not undertake the tasks referred to in Clause 4.1, point (b) (i).

---

[6] The technical file of the European Technical Assessment is deposited at Österreichisches Institut für Bautechnik.

[7] The prescribed test plan has been deposited with Österreichisches Institut für Bautechnik and is handed over only to the notified product certification body involved in the procedure for the assessment and verification of constancy of performance. The prescribed test plan is also referred to as control plan.

electronic copy electronic copy electronic copy electronic copy electronic copy electronic copy

5 Technical details necessary for the implementation of the AVCP system, as provided for in the applicable EAD

5.1 Tasks for the manufacturer

5.1.1 Factory production control

In the manufacturing plant, the manufacturer establishes and continuously maintains a factory production control. All procedures and specifications adopted by the manufacturer are documented in a systematic manner. Purpose of factory production control is to ensure the constancy of performances of the BBR VT CONA CMI – Bonded Post-tensioning System with 04 to 31 Strands with regard to the essential characteristics.

The manufacturer only uses raw materials supplied with the relevant inspection documents as laid down in the control plan. The incoming raw materials are subjected to controls by the manufacturer before acceptance. Check of incoming materials includes control of inspection documents presented by the manufacturer of the raw materials.

Testing within factory production control is in accordance with the prescribed test plan. The results of factory production control are recorded and evaluated. The records are presented to the notified product certification body involved in continuous surveillance and are kept at least for ten years after the product has been placed on the market. On request, the records are presented to Österreichisches Institut für Bautechnik.

If test results are unsatisfactory, the manufacturer immediately implements measures to eliminate the defects. Products or components that are not in conformity with the requirements are removed. After elimination of the defects, the respective test – if verification is required for technical reasons – is repeated immediately.

At least once a year the manufacturer audits the manufacturers of the components given in Annex 29.

The basic elements of the prescribed test plan are given in Annex 27 and Annex 28, conform to ETAG 013, Annex E.1, and are specified in the quality management plan of the BBR VT CONA CMI – Bonded Post-tensioning System with 04 to 31 Strands.

5.1.2 Declaration of performance

The manufacturer is responsible for preparing the declaration of performance. When all the criteria of the assessment and verification of constancy of performance are met, including the certificate of constancy of performance issued by the notified product certification body, the manufacturer draws up the declaration of performance. Essential characteristics to be included in the declaration of performance for the corresponding intended use are given in Table 8 and Table 9. In Annex 30 the combinations of essential characteristics and corresponding intended uses are listed.

5.2 Tasks for the notified product certification body

5.2.1 Initial inspection of the manufacturing plant and of factory production control

The notified product certification body verifies the ability of the manufacturer for a continuous and orderly manufacturing of the BBR VT CONA CMI – Bonded Post-tensioning System with 04 to 31 Strands according to the European Technical Assessment. In particular, the following items are appropriately considered.

- Personnel and equipment
- Suitability of the factory production control established by the manufacturer
- Full implementation of the prescribed test plan

electronic copy

5.2.2 Continuing surveillance, assessment, and evaluation of factory production control

The notified product certification body visits the factory at least once a year for routine inspection. In particular, the following items are appropriately considered.

- Manufacturing process including personnel and equipment
- Factory production control
- Implementation of the prescribed test plan

Each manufacturer of the components given in Annex 29 is audited at least once in five years. It is verified that the system of factory production control and the specified manufacturing process are maintained, taking account of the prescribed test plan.

The results of continuous surveillance are made available on demand by the notified product certification body to Österreichisches Institut für Bautechnik. When the provisions of the European Technical Assessment and the prescribed test plan are no longer fulfilled, the certificate of constancy of performance is withdrawn by the notified product certification body.

5.2.3 Audit-testing of samples taken by the notified product certification body at the manufacturing plant or at the manufacturer's storage facilities

During surveillance inspections, the notified product certification body takes samples of components of the BBR VT CONA CMI – Bonded Post-tensioning System with 04 to 31 Strands for independent testing. For the most important components, Annex 29 summarises the minimum procedures performed by the notified product certification body.

Issued in Vienna on 30 October 2017
by Österreichisches Institut für Bautechnik

The original document is signed by

Rainer Mikulits
Managing Director

electronic copy

Stressing anchorage, accessible fixed anchorage SA, FA [1)]

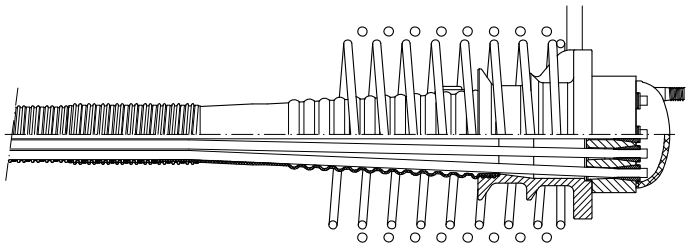

Inaccessible fixed anchorage FA [1)]

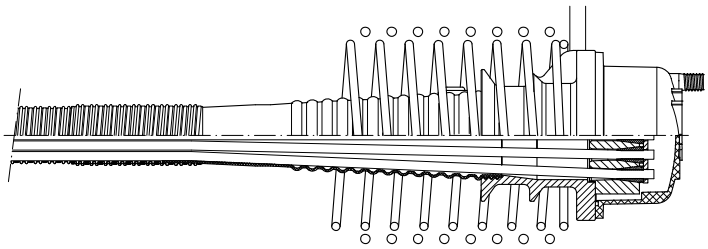

Electrically isolated stressing, electrically isolated accessible fixed anchorage SAE

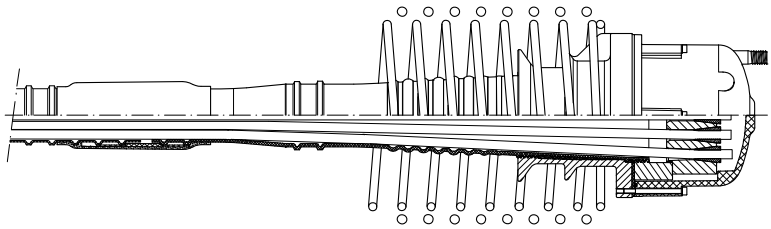

Electrically isolated inaccessible fixed anchorage FAE

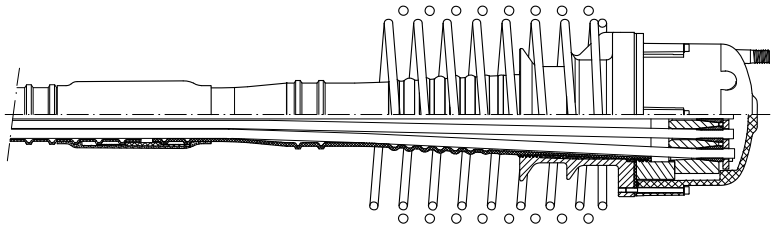

1) For anchorages of other than fully encapsulated or electrically isolated tendons, steel caps are available as well.

electronic copy

Fixed and stressing coupler FK, SK

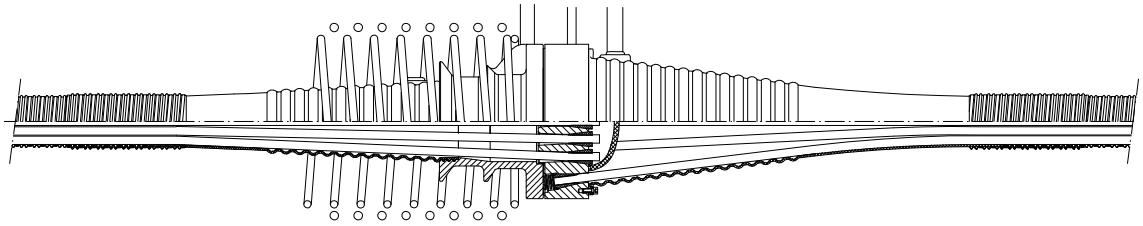

Fixed and stressing coupler FH, SH

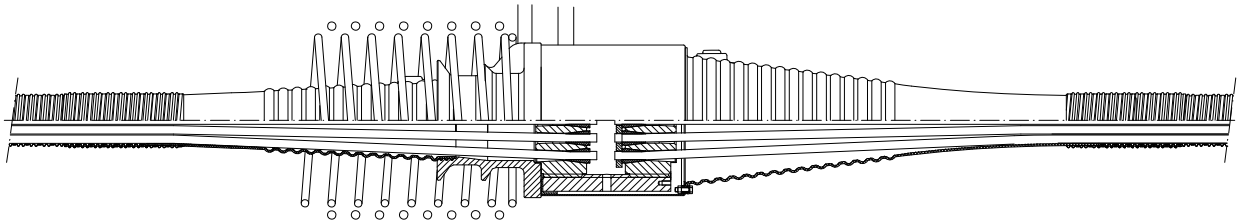

Movable coupler BK

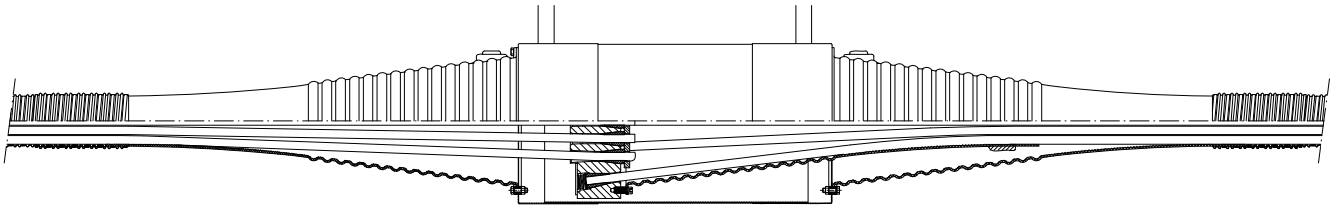

Movable coupler BH

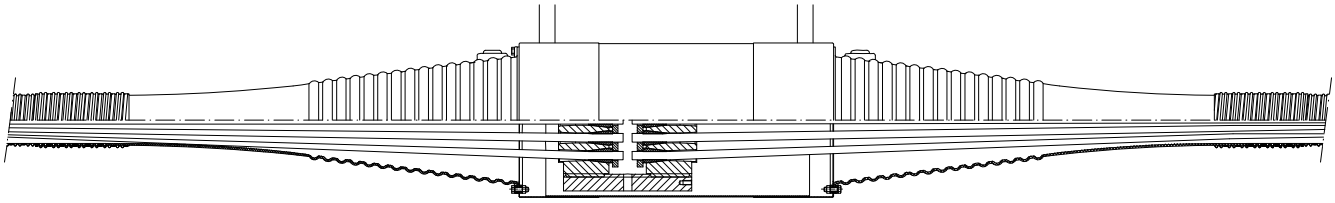

Electrically isolated fixed and stressing coupler FHE, SHE

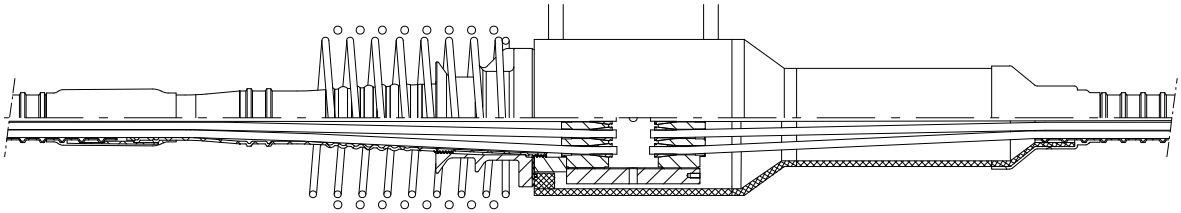

CONA CMI	**Bonded Post-tensioning System** Overview on couplers	**Annex 2** of European Technical Assessment **ETA-06/0147** of 30.10.2017

electronic copy

Anchor head A1–A4

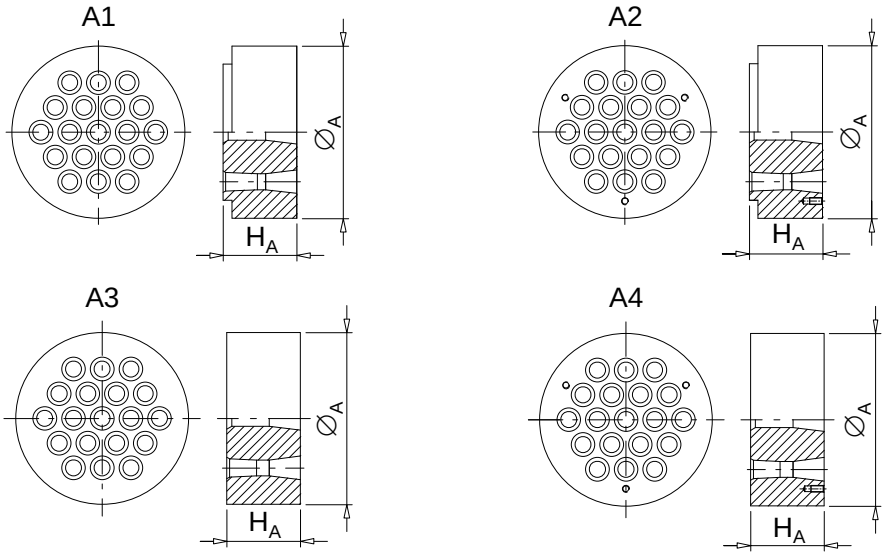

Coupler head K

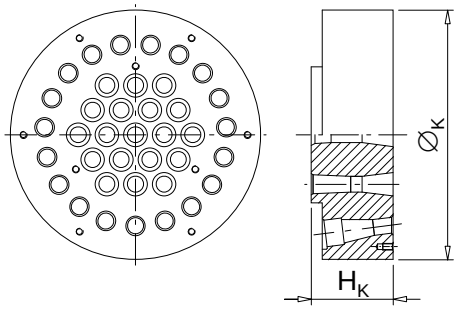

Cover plate

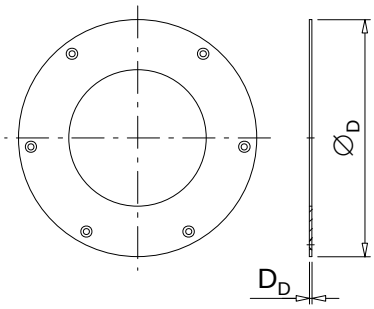

Spring A

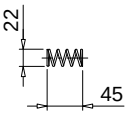

Spring K

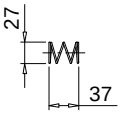

Cone

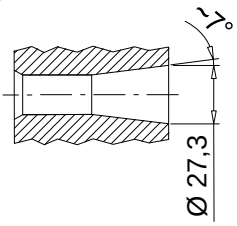

Wedge

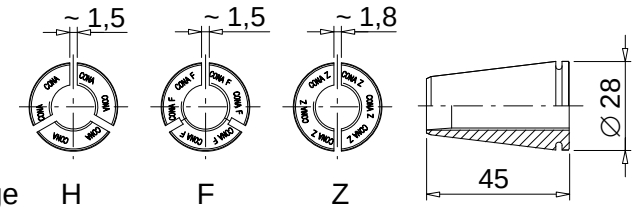

Number of strands			04	07	09	12	15	19	22	24	27	31
Anchor head A1–A4												
Diameter	$\varnothing_A$	mm	100	130	160	160	200	200	225	240	255	255
Height	H_A	mm	50	55	60	65	75	85	95	100	105	110
Coupler anchor head K												
Diameter	$\varnothing_K$	mm	195	210	250	250	290	290	310	340	390	390
Height	H_K	mm	85	85	90	90	90	95	105	120	125	130
Cover plate												
Diameter	$\varnothing_D$	mm	192	207	246	246	286	286	306	336	386	386
Thickness	D_D	mm	3	3	3	3	3	3	5	5	5	5

electronic copy

Bearing trumplate A

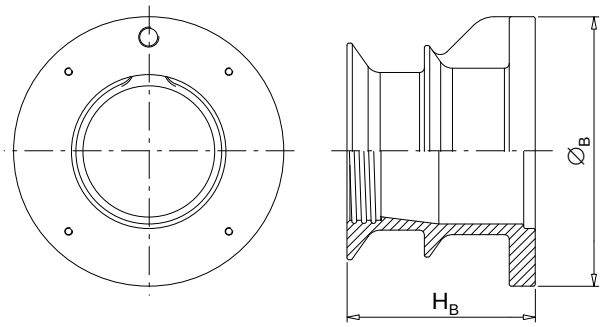

Coupler head H1

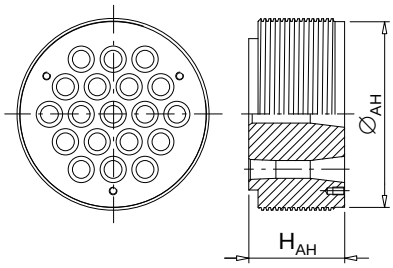

Coupler sleeve H

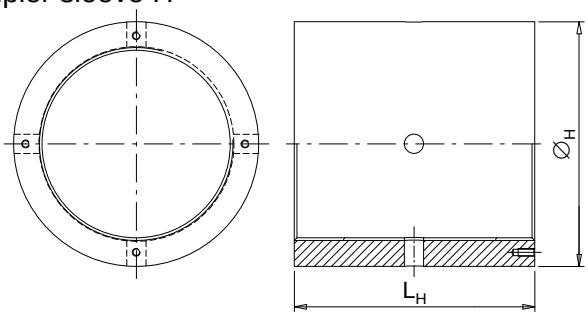

Wedge retaining plate H

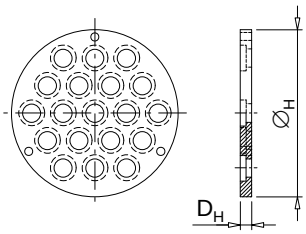

Wedge retaining plate A and E

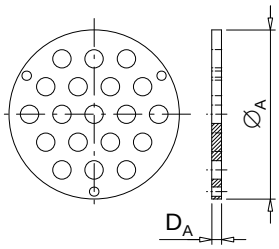

Number of strands			04	07	09	12	15	19	22	24	27	31
Bearing trumplate A												
Diameter	$\varnothing_B$	mm	130	170	225	225	280	280	310	325	360	360
Height	H_B	mm	120	128	150	150	195	195	206	227	250	250
Coupler anchor head H1												
Diameter	$\varnothing_{AH}$	mm	100	130	160	160	200	200	225	240	255	255
Height	H_{AH}	mm	55	65	70	80	80	95	100	100	105	115
Wedge retaining plate H												
Diameter	$\varnothing_H$	mm	91	117	157	157	185	185	205	232	234	234
Thickness	D_H	mm	10	10	12	12	15	15	15	15	15	15
Coupler sleeve H												
Diameter	$\varnothing_H$	mm	133	170	203	213	259	269	296	312	330	338
Length	L_H	mm	180	200	210	230	240	270	270	280	300	320
Wedge retaining plate A and E												
Diameter	$\varnothing_A$	mm	91	117	157	157	185	185	205	232	234	234
Thickness	D_A	mm	5	5	8	8	10	10	10	10	10	10

Member of EOTA

electronic copy electronic copy electronic copy electronic copy electronic copy electronic copy

Trumpet A

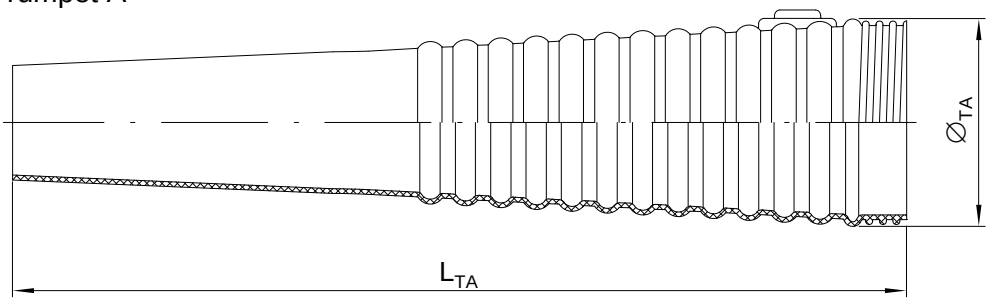

Tension ring

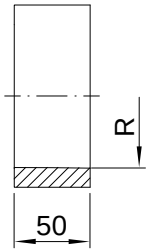

Trumpet K

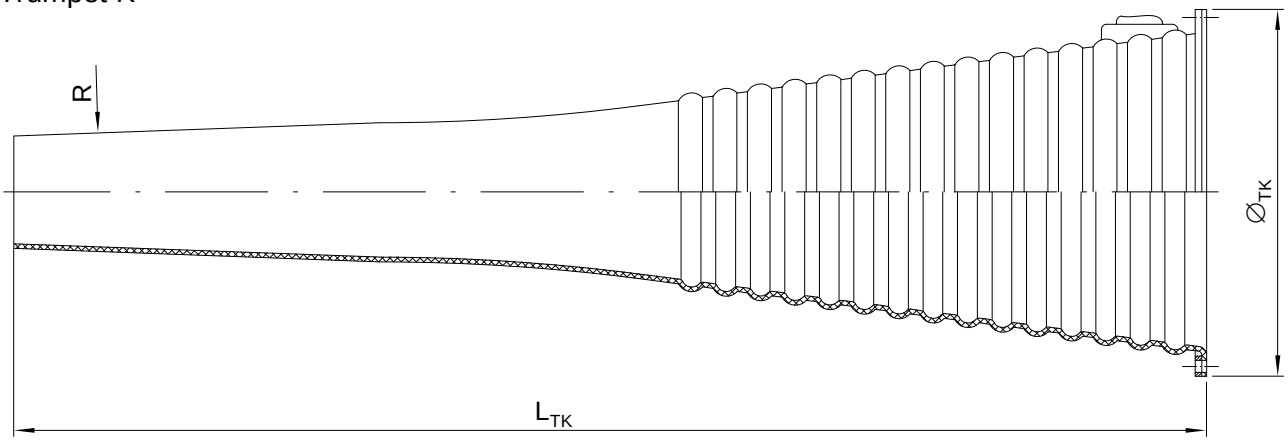

Trumpet F

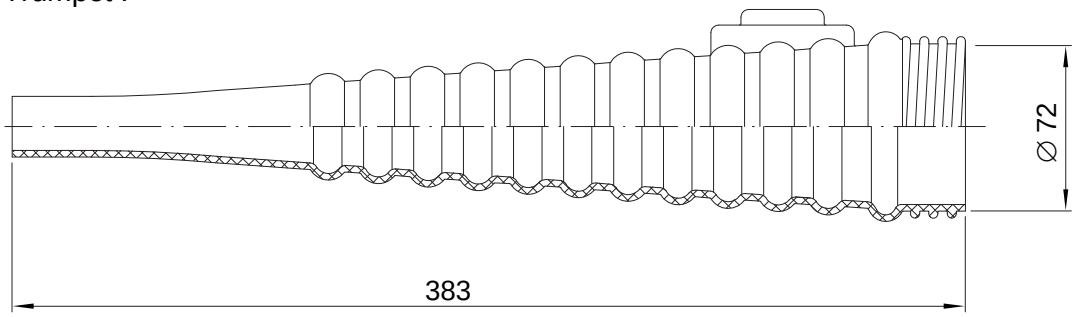

Dimensions in mm

Number of strands			04	07	09	12	15	19	22	24	27	31
Trumpet A												
Diameter	$\varnothing_{TA}$	mm	72	88	127	127	153	153	170	191	191	191
Length	L_{TA}	mm	200	328	623	508	694	579	715	866	866	751
Trumpet K												
Diameter	$\varnothing_{TK}$	mm	185	203	240	240	275	275	305	330	375	375
Length	L_{TK}	mm	470	640	845	730	890	775	840	1 090	1 265	1 150

Member of EOTA

Grouting Cap A

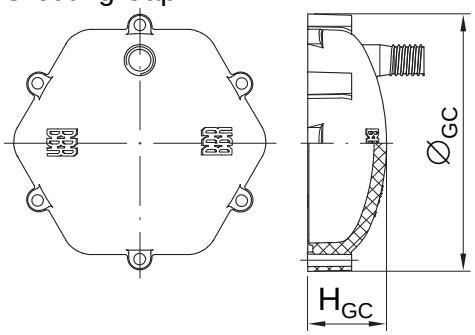

Protection Cap A

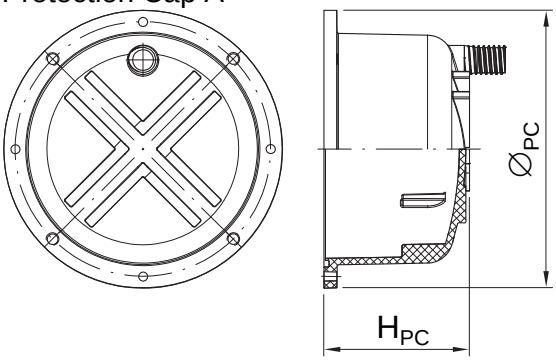

Half-shell

Round ID 50, ID 60, ID 75

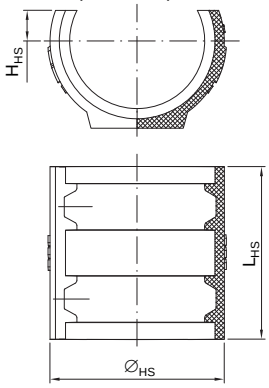

Round ID 85, ID 100, ID 115, ID130

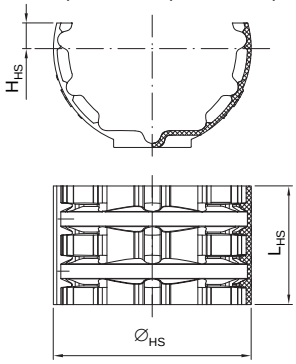

Flat

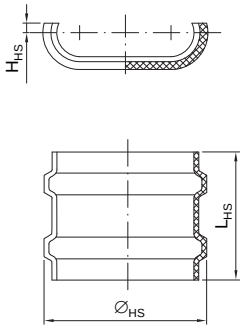

Male grouting adaptor 3/4” to 23 mm

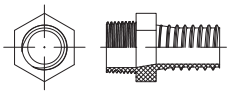

Female grouting adaptor 23 mm to 3/4”

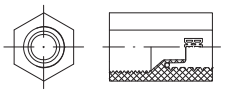

Plug 3/4”

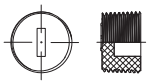

Number of strands			04	07	09	12	15	19	22	24	27	31
Grouting Cap A												
Diameter	$Ø_{GC}$	mm	98	118	158	158	188	188	204	234	242	242
Height	H_{GC}	mm	52	53	58	58	58	58	60	68	68	68
Protection Cap A												
Diameter	$Ø_{PC}$	mm	116	146	218	218	260	260	290	305	320	320
Height	H_{PC}	mm	98	106	108	108	128	128	141	143	158	158

Plastic duct	—	Flat		Circular						
Number of strands	—	04		04	07–09	09–15	15–19	19–27	22–31	31
Designation	—	21 × 72	25 × 76	50	60	75	85	100	115	130

Half-shell											
Height	H_{HS}	mm	6	6	9	13	13	14	15	15	20
Width	$Ø_{HS}$	mm	91.5	96.5	62.0	75.5	93.0	102.5	118.0	138.0	153.0
Length	L_{HS}	mm	80	80	85	85	100	79	79	79	92

electronic copy electronic copy electronic copy electronic copy electronic copy electronic copy

electronic copy

Trumpet E

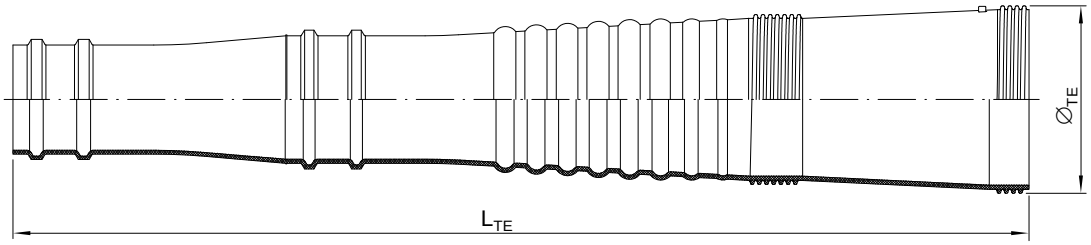

Steel ring E

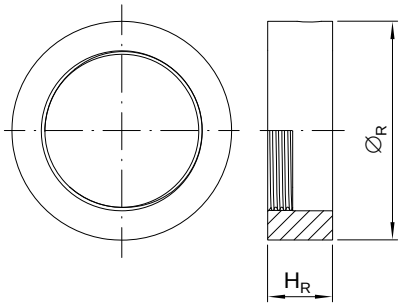

Bearing trumplate E

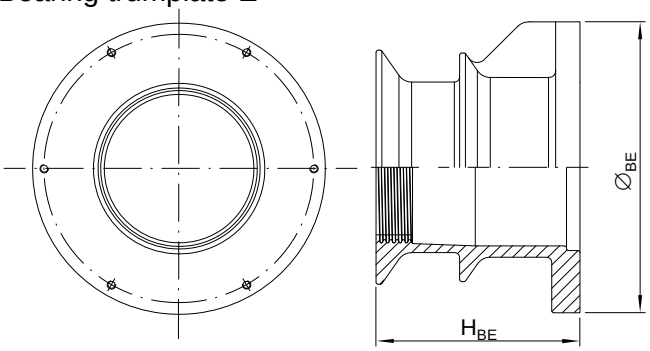

Protection cap E

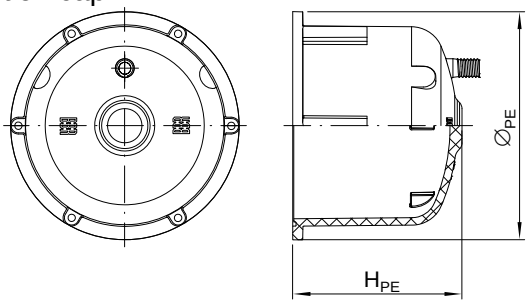

Isolation ring E

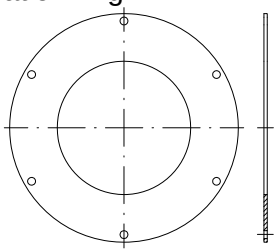

Number of strands			04	07	09	12	15	19	22	24	27	31
Trumpet E												
Diameter	$\varnothing_{TE}$	mm	74	93	128	128	157	157	178	191	201	201
Length	L_{TE}	mm	312	428	600	600	848	848	980	1 005	1 040	1 040
Steel ring E												
Diameter	$\varnothing_R$	mm	100	130	173	173	220	220	244	256	279	279
Height	H_R	mm	59	59	65	65	65	65	65	65	65	65
Bearing trumplate E												
Diameter	$\varnothing_{BE}$	mm	145	170	225	225	280	280	310	325	360	360
Height	H_{BE}	mm	120	128	150	150	195	195	206	227	250	250
Protection Cap E												
Diameter	$\varnothing_{PE}$	mm	143	168	229	229	276	276	306	316	348	348
Height	H_{PE}	mm	167	174	185	185	205	205	219	223	233	233

electronic copy

BBR VT Plastic Duct – Circular duct – 0406–3106

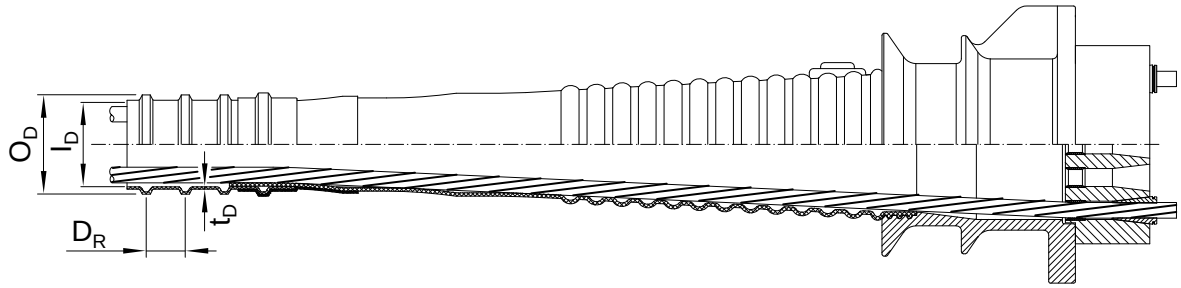

Number of strands n06			04	07–09	09–15	15–19	19–27	22–31	31
Designation		—	50	60	75	85	100	115	130
Inner diameter	I_D	mm	48.0	58.5	76.0	85.5	100.0	115.0	128.5
Outer diameter	O_D	mm	59.0	72.5	91.0	100.5	116.0	135.0	151.5
Distance ribs	D_R	mm	28.0	40.0	50.0	39.5	39.5	39.5	40.5
Minimum thickness	t_D	mm	2.0	2.0	2.5	2.5	3.0	3.5	4.0

NOTE Dimensions rounded to the closest 0.5 mm.

BBR VT Plastic Duct – Coupler for circular duct – 0406–3106

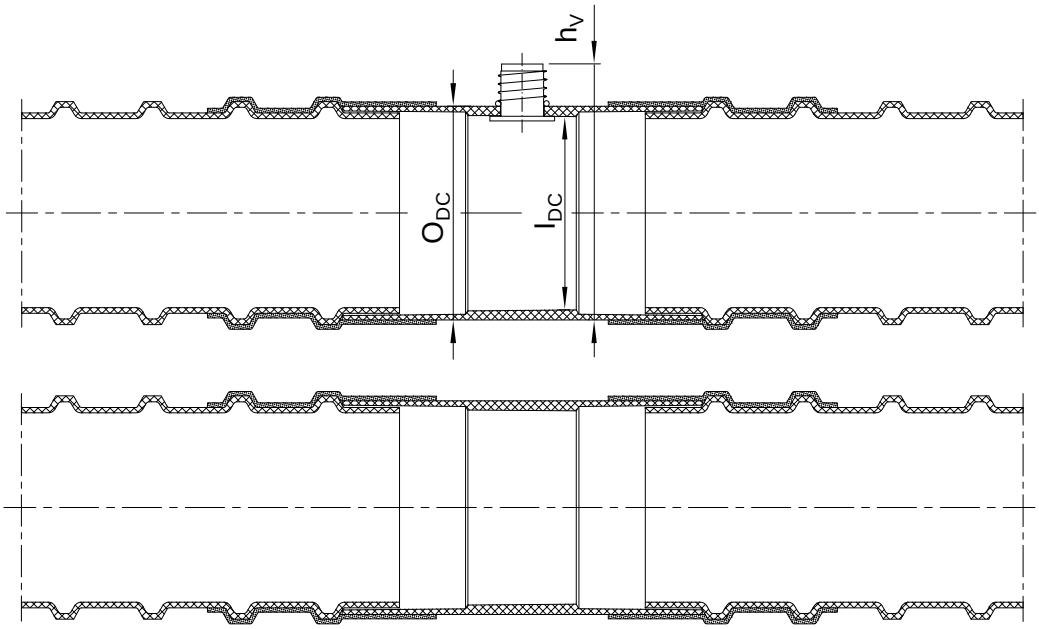

Number of strands n06			04	07–09	09–15	15–19	19–27	22–31	31
Inner diameter coupler	I_{DC}	mm	56.0	69.0	87.0	96.0	112.0	130.5	147.0
Outer diameter coupler	O_{DC}	mm	64.5	78.0	96.0	108.0	124.0	142.0	156.5
Vent height	h_V	mm	81.5	95.5	114.0	126.0	137.5	154.5	175.0

NOTE Dimensions rounded to the closest 0.5 mm.

electronic copy

BBR VT Plastic Duct – Flat duct – 0406

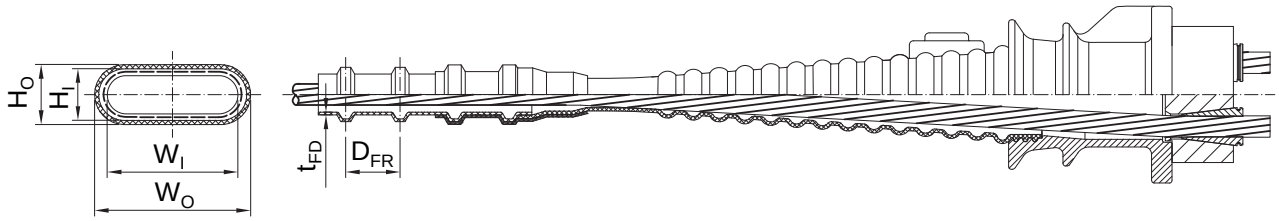

Number of strands n06			04	
Designation		—	21 × 72	25 × 76
Height, inner dimension	H_I	mm	21.0	25.0
Height, outer dimension	H_O	mm	36.0	40.0
Width, inner dimension	W_I	mm	70.5	75.5
Width, outer dimension	W_O	mm	85.5	90.5
Distance ribs	D_{FR}	mm	40.0	40.0
Minimum thickness	t_{FD}	mm	2.0	2.0

NOTE Dimensions rounded to the closest 0.5 mm.

BBR VT Plastic Duct – Coupler flat duct – 0406

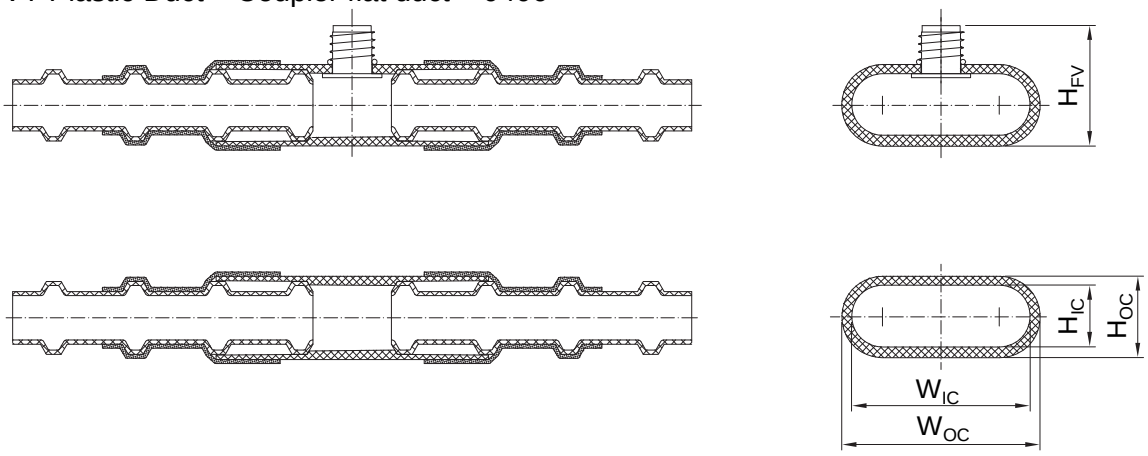

Number of strands n06			04	
Designation		—	21 × 72	25 × 76
Height, inner dimension	H_{IC}	mm	30.5	35.5
Height, outer dimension	H_{OC}	mm	40.0	43.5
Width, inner dimension	W_{IC}	mm	81.5	86.5
Width, outer dimension	W_{OC}	mm	90.5	94.5
Vent height	H_{FV}	mm	59.0	62.5

NOTE Dimensions rounded to the closest 0.5 mm.

Member of EOTA

electronic copy electronic copy electronic copy electronic copy electronic copy electronic copy

Material specifications

Component	Standard / Specification
Anchor head A A CONA CMI 0406 to 3106	EN 10083-1 EN 10083-2
Coupler anchor head K K CONA CMI 0406 to 3106	EN 10083-1 EN 10083-2
Coupler anchor head H H CONA CMI 0406 to 3106	EN 10083-1 EN 10083-2
Bearing trumplate A CONA CMI 0406 to 3106	EN 1561 EN 1563
Bearing trumplate E CONA CMI 0406 to 3106	EN 1561 EN 1563
Coupler sleeve H H CONA CMI 0406 to 3106	EN 10210-1
Wedge retaining plate A, E, and H, cover plate CONA CMI 0406 to 3106	EN 10025-2
Trumpet A, K, and E	EN ISO 17855-1 EN ISO 19069-1
Trumpet A and K	EN 10025
Steel ring E	EN 10210-1
Isolation ring E	Composite material
Grouting cap A Protection cap A Protection cap E Grouting adaptor Plug Half shell	EN ISO 17855-1
Protection cap A	EN 10025
Tension ring B	EN 10210-1
Ring wedge H, F, and Z	EN 10277-2 EN 10084
Spring A, K	EN 10270-1
Helix	Ribbed reinforcing steel, $R_e \geq 500$ MPa
Additional reinforcement, stirrups	Ribbed reinforcing steel, $R_e \geq 500$ MPa
Steel strip sheath	EN 523
BBR VT Plastic Duct	Polypropylene (PP) according to Annex 26

electronic copy electronic copy electronic copy electronic copy electronic copy electronic copy

7-wire prestressing steel strands according to prEN 10138-3 [1)]

Steel designation			Y1770S7	Y1860S7	Y1770S7	Y1860S7
Tensile strength	R_m	MPa	1 770	1 860	1 770	1 860
Diameter	d	mm	15.3	15.3	15.7	15.7
Nominal cross-sectional area	A_p	mm^2	140	140	150	150
Nominal mass per metre	m	kg/m	1.093		1.172	
Permitted deviation from nominal mass		%	± 2			
Characteristic value of maximum force	F_{pk}	kN	248	260	266	279
Maximum value of maximum force	$F_{m,\,max}$	kN	285	299	306	321
Characteristic value of 0.1 % proof force [2)]	$F_{p0.1}$	kN	218	229	234	246
Minimum elongation at maximum force, $L_0 \geq 500$ mm	A_{gt}	%	3.5			
Modulus of elasticity	E_p	MPa	195 000 [3)]			

1) Suitable prestressing steel strands according to standards and regulations in force at the place of use may also be used.
2) For prestressing steel strands according to prEN 10138-3, 09.2000, the value is multiplied by 0.98.
3) Standard value

Member of EOTA

electronic copy electronic copy electronic copy electronic copy electronic copy

CONA CMI n06-140

Number of strands	n	—	04	07	09	12	15	19	22	24	27	31
Nominal cross-sectional area of prestressing steel	A_p	mm^2	560	980	1 260	1 680	2 100	2 660	3 080	3 360	3 780	4 340
Nominal mass of prestressing steel	M	kg/m	4.37	7.65	9.84	13.12	16.40	20.77	24.05	26.23	29.51	33.88
Characteristic tensile strength f_{pk} = 1 770 MPa												
Characteristic value of maximum force of tendon	F_{pk}	kN	992	1 736	2 232	2 976	3 720	4 712	5 456	5 952	6 696	7 688
Characteristic tensile strength f_{pk} = 1 860 MPa												
Characteristic value of maximum force of tendon	F_{pk}	kN	1 040	1 820	2 340	3 120	3 900	4 940	5 720	6 240	7 020	8 060

CONA CMI n06-150

Number of strands	n	—	04	07	09	12	15	19	22	24	27	31
Nominal cross-sectional area of prestressing steel	A_p	mm^2	600	1 050	1 350	1 800	2 250	2 850	3 300	3 600	4 050	4 650
Nominal mass of prestressing steel	M	kg/m	4.69	8.20	10.55	14.06	17.58	22.27	25.78	28.13	31.64	36.33
Characteristic tensile strength f_{pk} = 1 770 MPa												
Characteristic value of maximum force of tendon	F_{pk}	kN	1 064	1 862	2 394	3 192	3 990	5 054	5 852	6 384	7 182	8 246
Characteristic tensile strength f_{pk} = 1 860 MPa												
Characteristic value of maximum force of tendon	F_{pk}	kN	1 116	1 953	2 511	3 348	4 185	5 301	6 138	6 696	7 533	8 649

Member of EOTA

electronic copy electronic copy electronic copy electronic copy electronic copy electronic copy

Maximum prestressing and overstressing forces

Designation		CONA CMI							
		n06-140		n06-150		n06-140		n06-150	
—		Maximum prestressing force [1] $0.9 \cdot F_{p0.1}$				Maximum overstressing force [1), 2)] $0.95 \cdot F_{p0.1}$			
Characteristic tensile strength f_{pk}	MPa	1 770	1 860	1 770	1 860	1 770	1 860	1 770	1 860
—	—	kN	kN	kN	kN	kN	kN	kN	kN
n Number of strands	04	785	824	842	886	828	870	889	935
	07	1 373	1 443	1 474	1 550	1 450	1 523	1 556	1 636
	09	1 766	1 855	1 895	1 993	1 864	1 958	2 001	2 103
	12	2 354	2 473	2 527	2 657	2 485	2 611	2 668	2 804
	15	2 943	3 092	3 159	3 321	3 107	3 263	3 335	3 506
	19	3 728	3 916	4 001	4 207	3 935	4 133	4 224	4 440
	22	4 316	4 534	4 633	4 871	4 556	4 786	4 891	5 141
	24	4 709	4 946	5 054	5 314	4 970	5 221	5 335	5 609
	27	5 297	5 565	5 686	5 978	5 592	5 874	6 002	6 310
	31	6 082	6 389	6 529	6 863	6 420	6 744	6 891	7 245

[1] The given values are maximum values according to Eurocode 2. The actual values are taken from the standards and regulations in force at the place of use. Conformity with the stabilisation and crack width criteria in the load transfer test was verified to a load level of $0.80 \cdot F_{pk}$

[2] Overstressing is permitted if the force in the prestressing jack can be measured to an accuracy of ± 5 % of the final value of the overstressing force.

Member of EOTA

electronic copy electronic copy electronic copy electronic copy electronic copy electronic copy

Inner diameter of steel strip sheath, d_i, and minimum radii of curvature, R_{min}, for $p_{R,\,max}$ = 140 kN/m

Number of strands	d_i for f ≈ 0.35	R_{min} for f ≈ 0.35	d_i for f ≈ 0.5	R_{min} for f ≈ 0.5
—	mm	m	mm	m
04	45	4.2	45	4.2
07	60	5.5	55	6.0
09	70	6.0	60	7.0
12	80	7.0	70	8.0
15	90	7.8	75	9.4
19	100	8.9	85	10.5
22	110	9.4	90	11.5
24	115	9.8	95	11.8
27	120	10.6	100	12.7
31	130	11.2	110	13.2

Inner diameter of steel strip sheath, d_i, and minimum radii of curvature, R_{min}, for $p_{R,\,max}$ = 200 kN/m

Number of strands	d_i for f ≈ 0.35	R_{min} for f ≈ 0.35	d_i for f ≈ 0.5	R_{min} for f ≈ 0.5
—	mm	m	mm	m
04	45	2.9	45	2.9
07	60	3.8	55	4.2
09	70	4.2	60	4.9
12	80	4.9	70	5.6
15	90	5.5	75	6.6
19	100	6.2	85	7.3
22	110	6.6	90	8.0
24	115	6.9	95	8.3
27	120	7.4	100	8.9
31	130	7.8	110	9.3

f ..... Degree of filling, see Clause 1.4.2

electronic copy electronic copy electronic copy electronic copy electronic copy electronic copy

Inner diameter of plastic duct, d_i, and minimum radii of curvature, R_{min}, at ambient temperature

Number of strands	Designation	d_i for f ≈ 0.35	R_{min} [1)] for f ≈ 0.35	Designation	d_i for f ≈ 0.5	R_{min} [1)] for f ≈ 0.5
—	—	mm	m	—	mm	m
04	48	48	4.6	48	48	4.6
07	59	58.5	6.5	59	58.5	6.5
09	76	76	6.5	59	58.5	7.2
12	76	76	7.4	76	76	7.4
15	85	85.6	8.2	85	85.6	8.2
19	100	100	7.4	100	100	8.9
22	115	115	7.4	100	100	8.9
24	115	115	7.4	100	100	9.3
27	115	115	8.1	100	100	9.3
31	130	128.5	8.1	115	115	9.3

Inner diameter of plastic duct, d_i, and minimum radii of curvature, R_{min}, at high temperature

Number of strands	Designation	d_i for f ≈ 0.35	R_{min} [1)] for f ≈ 0.35
—	—	mm	m
04	48	48	7.8
07	76	76	7.8
09	76	76	7.8
12	85	85.6	9.2
15	100	100	9.2
19	100	100	9.2
22	100	100	9.6
24	115	115	9.6
27	115	115	9.6
31	130	128.5	9.6

NOTE
[1)] Based on wear resistance test according to *fib* bulletin 7.
f..... Degree of filling, see Clause 1.4.2

Member of EOTA

electronic copy electronic copy electronic copy electronic copy electronic copy electronic copy

Inner dimensions of plastic flat duct and minimum radii of curvature, R_{min}, at ambient temperature

Number of strands	Designation	Inner dimensions		R_{min} [1)]
		Height	Width	
—	—	mm	mm	m
04	21 × 72	21.5	70.5	1.5 [2)]
	25 × 76	25.0	75.5	1.5 [2)]

Inner dimensions of plastic flat duct and minimum radii of curvature, R_{min}, at high temperature

Number of strands	Designation	Inner dimensions		R_{min} [1)]
		Height	Width	
—	—	mm	mm	m
04	21 × 72	21.0	70.5	1.8 [2)]
	25 × 76	25.0	75.5	1.8 [2)]

NOTES
1) Based on wear resistance test according to *fib* bulletin 7.
2) For full prestressing the minimum radius of curvature is ≥ 2.0 m.

electronic copy electronic copy electronic copy electronic copy electronic copy electronic copy

Minimum centre spacing of tendon anchorages

Tendon		Minimum centre spacing $a_c = b_c$				
$f_{cm,\,0,\,cube,\,150}$	MPa	23	28	34	38	43
$f_{cm,\,0,\,cylinder,\,\varnothing\,150}$	MPa	19	23	28	31	35
CONA CMI 0406	mm	235	215	210	210	205
CONA CMI 0706	mm	310	285	260	255	255
CONA CMI 0906	mm	350	320	310	310	310
CONA CMI 1206	mm	405	370	340	325	310
CONA CMI 1506	mm	455	415	380	365	365
CONA CMI 1906	mm	510	465	425	410	390
CONA CMI 2206	mm	550	500	460	440	420
CONA CMI 2406	mm	575	525	480	460	435
CONA CMI 2706	mm	610	555	505	485	460
CONA CMI 3106	mm	650	595	545	520	495

Minimum edge distance of tendon anchorages

Tendon		Minimum edge distance $a_e = b_e$				
$f_{cm,\,0,\,cube,\,150}$	MPa	23	28	34	38	43
$f_{cm,\,0,\,cylinder,\,\varnothing\,150}$	MPa	19	23	28	31	35
CONA CMI 0406	mm	110 + c	100 + c	95 + c	95 + c	95 + c
CONA CMI 0706	mm	145 + c	135 + c	120 + c	120 + c	120 + c
CONA CMI 0906	mm	165 + c	150 + c	145 + c	145 + c	145 + c
CONA CMI 1206	mm	195 + c	175 + c	160 + c	155 + c	145 + c
CONA CMI 1506	mm	220 + c	200 + c	180 + c	175 + c	175 + c
CONA CMI 1906	mm	245 + c	225 + c	205 + c	195 + c	185 + c
CONA CMI 2206	mm	265 + c	240 + c	220 + c	210 + c	200 + c
CONA CMI 2406	mm	280 + c	255 + c	230 + c	220 + c	210 + c
CONA CMI 2706	mm	295 + c	270 + c	245 + c	235 + c	220 + c
CONA CMI 3106	mm	315 + c	290 + c	265 + c	250 + c	240 + c

c.... Concrete cover in mm

Standards and regulations on concrete cover in force at the place of use are observed.

Member of EOTA

Stressing and fixed anchorage or coupler

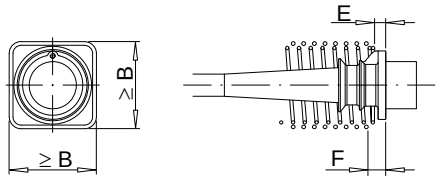

$a_e = a'_e + c$
$b_e = b'_e + c$
c … Concrete cover

Centre spacing and edge distance

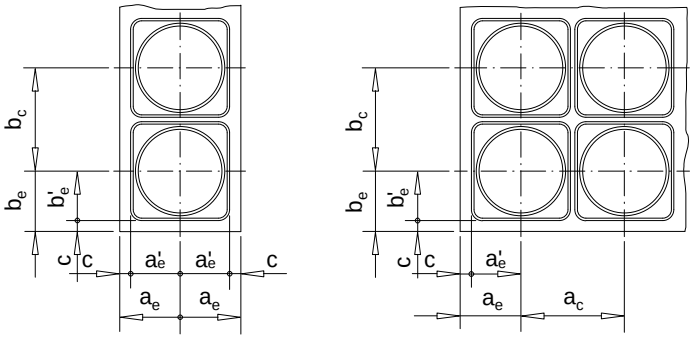

Technical data of anchorages																
BBR VT CONA CMI		**04**					**07**					**09**				
Strand arrangement																
Prestressing steel strand [1]	**mm²**	**150**					**150**					**150**				
Cross-sectional area	mm²	600					1 050					1 350				
Charact. tensile strength R_m	**MPa**	**1 860**					**1 860**					**1 860**				
Charact. maximum force F_m	kN	1 116					1 953					2 511				
$0.90 \cdot F_{p0.1}$	kN	886					1 550					1 993				
$0.95 \cdot F_{p0.1}$	kN	935					1 636					2 103				
Helix and additional reinforcement																
Min. concrete strength, cube $f_{cm,0}$	**MPa**	**23**	**28**	**34**	**38**	**43**	**23**	**28**	**34**	**38**	**43**	**23**	**28**	**34**	**38**	**43**
Min. concrete strength, cylinder $f_{cm,0}$	**MPa**	**19**	**23**	**28**	**31**	**35**	**19**	**23**	**28**	**31**	**35**	**19**	**23**	**28**	**31**	**35**
Helix																
Outer diameter	mm	180	160	160	160	155	230	200	200	200	200	280	260	255	250	250
Bar diameter [2]	mm	10	10	10	10	10	12	12	12	12	12	14	12	12	12	12
Length, approx.	mm	185	185	185	185	185	254	256	231	231	231	282	281	281	281	281
Pitch	mm	45	45	45	45	45	45	50	50	50	50	50	50	50	50	50
Number of pitches	—	5	5	5	5	5	6	6	5	5	5	6	6	6	6	6
Distance E	mm	15	15	15	15	15	18	18	18	18	18	20	20	20	20	20
Additional reinforcement																
Number of stirrups	—	3	3	4	4	3	5	4	4	4	4	5	5	5	4	5
Bar diameter [2]	mm	12	12	10	10	12	14	14	12	14	14	12	14	12	14	14
Spacing	mm	60	55	45	45	55	55	60	55	55	55	60	55	55	65	55
Distance from bearing trumplate F	mm	30	30	30	30	30	33	33	33	33	33	35	35	35	35	35
Outer dimensions B × B	mm	220	200	190	190	190	290	270	240	240	240	330	300	290	290	290
Centre spacing and edge distance																
Min. centre spacing a_c, b_c	mm	235	215	210	210	205	310	285	260	255	255	350	320	310	310	310
Min. edge distance, plus c a'_e, b'_e	mm	110	100	95	95	95	145	135	120	120	120	165	150	145	145	145

[1] Prestressing steel strand with nominal diameter of 15.3 mm, cross-sectional area of 140 mm² or with characteristic tensile strength below 1 860 MPa may also be used.
[2] Bar diameter of 14 mm can be replaced by 16 mm.

electronic copy

Member of EOTA

Stressing and fixed anchorage or coupler

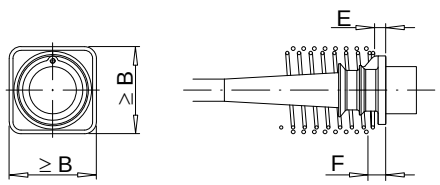

$a_e = a'_e + c$
$b_e = b'_e + c$
c … Concrete cover

Centre spacing and edge distance

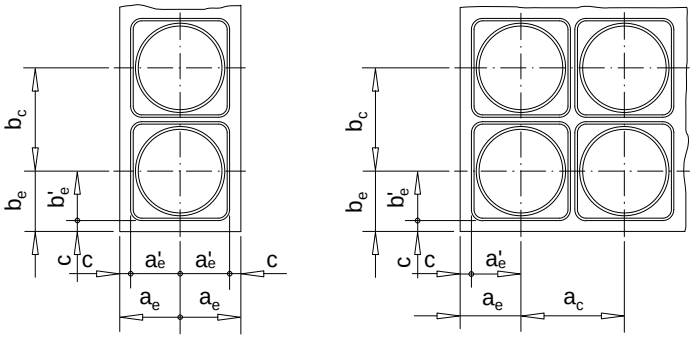

Technical data of anchorages																
BBR VT CONA CMI		**12**					**15**					**19**				
Strand arrangement																
Prestressing steel strand [1]	**mm²**	**150**					**150**					**150**				
Cross-sectional area	mm²	1 800					2 250					2 850				
Charact. tensile strength R_m	**MPa**	**1 860**					**1 860**					**1 860**				
Charact. maximum force F_m	kN	3 348					4 185					5 301				
$0.90 \cdot F_{p0.1}$	kN	2 657					3 321					4 207				
$0.95 \cdot F_{p0.1}$	kN	2 804					3 506					4 440				
Helix and additional reinforcement																
Min. concrete strength, cube $f_{cm,0}$	**MPa**	**23**	**28**	**34**	**38**	**43**	**23**	**28**	**34**	**38**	**43**	**23**	**28**	**34**	**38**	**43**
Min. concrete strength, cylinder $f_{cm,0}$	**MPa**	**19**	**23**	**28**	**31**	**35**	**19**	**23**	**28**	**31**	**35**	**19**	**23**	**28**	**31**	**35**
Helix																
Outer diameter	mm	330	280	275	260	250	375	330	315	305	305	420	360	360	330	325
Bar diameter [2]	mm	14	14	14	14	14	14	14	14	14	14	14	14	14	14	14
Length, approx.	mm	332	332	332	332	282	432	432	382	332	332	457	457	432	432	382
Pitch	mm	50	50	50	50	50	50	50	50	50	50	50	50	50	50	50
Number of pitches	—	7	7	7	7	6	9	9	8	7	7	10	10	9	9	8
Distance E	mm	20	20	20	20	20	27	27	27	27	27	27	27	27	27	27
Additional reinforcement																
Number of stirrups	—	7	6	5	5	6	7	6	5	6	5	7	7	7	7	7
Bar diameter [2]	mm	12	14	16	16	14	14	16	16	16	16	16	16	16	16	16
Spacing	mm	60	55	70	70	50	60	65	65	55	60	65	65	65	65	60
Distance from bearing trumplate F	mm	35	35	35	35	35	42	42	42	42	42	42	42	42	42	42
Outer dimensions B × B	mm	390	350	320	310	290	440	400	360	350	350	490	450	410	390	370
Centre spacing and edge distance																
Min. centre spacing a_c, b_c	mm	405	370	340	325	310	455	415	380	365	365	510	465	425	410	390
Min. edge distance, plus c a'_e, b'_e	mm	195	175	160	155	145	220	200	180	175	175	245	225	205	195	185

[1] Prestressing steel strand with nominal diameter of 15.3 mm, cross-sectional area of 140 mm² or with characteristic tensile strength below 1 860 MPa may also be used.
[2] Bar diameter of 14 mm can be replaced by 16 mm.

electronic copy

Member of EOTA

Stressing and fixed anchorage or coupler

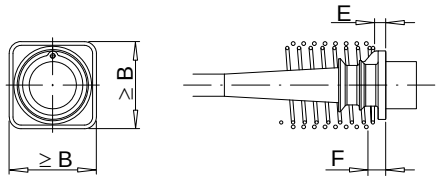

$a_e = a'_e + c$
$b_e = b'_e + c$
c … Concrete cover

Centre spacing and edge distance

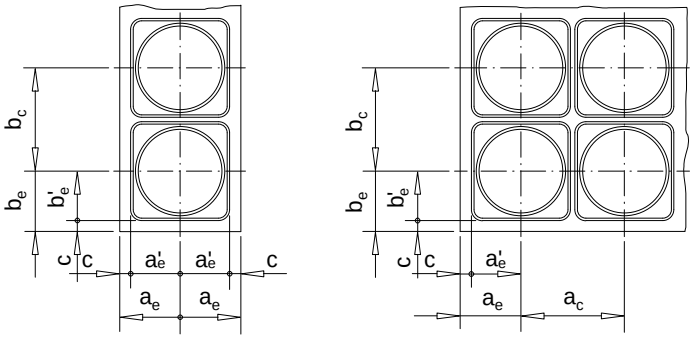

Technical data of anchorages											
BBR VT CONA CMI			**22**					**24**			
Strand arrangement			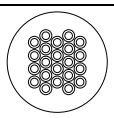					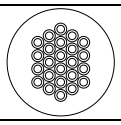			
Prestressing steel strand [1]		**mm²**	**150**					**150**			
Cross-sectional area		mm²	3 300					3 600			
Charact. tensile strength	**R_m**	**MPa**	**1 860**					**1 860**			
Charact. maximum force	F_m	kN	6 138					6 696			
$0.90 \cdot F_{p0.1}$		kN	4 871					5 314			
$0.95 \cdot F_{p0.1}$		kN	5 141					5 609			
Helix and additional reinforcement											
Min. concrete strength, cube	**$f_{cm,0}$**	**MPa**	**23**	**28**	**34**	**38**	**43**	**23**	**28**	**34**	**38**	**43**
Min. concrete strength, cylinder	**$f_{cm,0}$**	**MPa**	**19**	**23**	**28**	**31**	**35**	**19**	**23**	**28**	**31**	**35**
Helix												
Outer diameter		mm	475	420	390	360	340	475	430	410	360	360
Bar diameter [2]		mm	14	14	14	14	14	14	14	14	14	14
Length, approx.		mm	482	482	432	432	382	532	532	482	482	432
Pitch		mm	50	50	50	50	50	50	50	50	50	50
Number of pitches		—	10	10	9	9	8	11	11	10	10	9
Distance	E	mm	31	31	31	31	31	32	32	32	32	32
Additional reinforcement												
Number of stirrups		—	6	7	8	7	8	7	7	7	7	8
Bar diameter [2]		mm	20	20	20	20	16	20	20	20	20	20
Spacing		mm	80	75	65	65	50	80	80	70	65	55
Distance from bearing trumplate	F	mm	46	46	46	46	46	47	47	47	47	47
Outer dimensions	B × B	mm	530	480	440	420	400	560	510	460	440	420
Centre spacing and edge distance												
Min. centre spacing	a_c, b_c	mm	550	500	460	440	420	575	525	480	460	435
Min. edge distance, plus c	a'_e, b'_e	mm	265	240	220	210	200	280	255	230	220	210

[1] Prestressing steel strand with nominal diameter of 15.3 mm, cross-sectional area of 140 mm² or with characteristic tensile strength below 1 860 MPa may also be used.
[2] Bar diameter of 14 mm can be replaced by 16 mm.

electronic copy electronic copy electronic copy electronic copy electronic copy electronic copy

Member of EOTA

Stressing and fixed anchorage or coupler

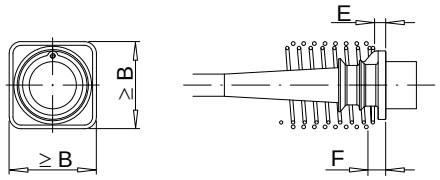

$a_e = a'_e + c$
$b_e = b'_e + c$
c … Concrete cover

Centre spacing and edge distance

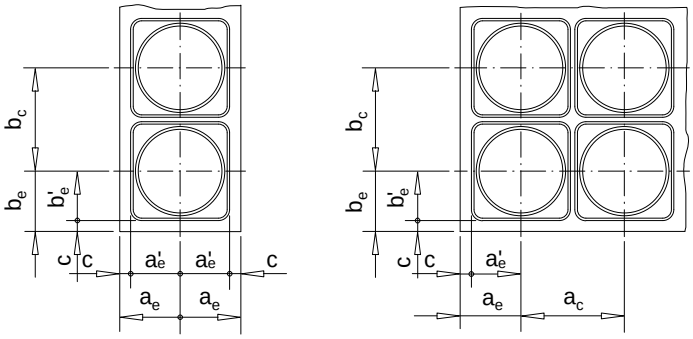

Technical data of anchorages											
BBR VT CONA CMI			**27**					**31**			
Strand arrangement			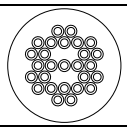					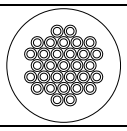			
Prestressing steel strand [1]		**mm²**	**150**					**150**			
Cross-sectional area		mm²	4 050					4 650			
Charact. tensile strength	**R_m**	**MPa**	**1 860**					**1 860**			
Charact. maximum force	F_m	kN	7 533					8 649			
$0.90 \cdot F_{p0.1}$		kN	5 978					6 863			
$0.95 \cdot F_{p0.1}$		kN	6 310					7 245			
Helix and additional reinforcement											
Min. concrete strength, cube	**$f_{cm,0}$**	**MPa**	**23**	**28**	**34**	**38**	**43**	**23**	**28**	**34**	**38**	**43**
Min. concrete strength, cylinder	**$f_{cm,0}$**	**MPa**	**19**	**23**	**28**	**31**	**35**	**19**	**23**	**28**	**31**	**35**
Helix											
Outer diameter		mm	520	475	440	420	390	560	520	475	430	430
Bar diameter [2]		mm	14	14	14	14	14	14	14	14	14	14
Length, approx.		mm	532	532	482	482	432	532	532	582	482	432
Pitch		mm	50	50	50	50	50	50	50	50	50	50
Number of pitches		—	11	11	10	10	9	11	11	12	10	9
Distance	E	mm	35	35	35	35	35	35	35	35	35	35
Additional reinforcement											
Number of stirrups		—	8	7	7	8	8	9	8	8	8	8
Bar diameter [2]		mm	20	20	20	20	20	20	20	20	20	20
Spacing		mm	80	80	75	60	60	80	75	70	65	60
Distance from bearing trumplate	F	mm	50	50	50	50	50	50	50	50	50	50
Outer dimensions	B × B	mm	590	540	490	470	440	630	580	530	500	480
Centre spacing and edge distance											
Min. centre spacing	a_c, b_c	mm	610	555	505	485	460	650	595	545	520	495
Min. edge distance, plus c	a'_e, b'_e	mm	295	270	245	235	220	315	290	265	250	240

[1] Prestressing steel strand with nominal diameter of 15.3 mm, cross-sectional area of 140 mm² or with characteristic tensile strength below 1 860 MPa may also be used.
[2] Bar diameter of 14 mm can be replaced by 16 mm.

electronic copy

electronic copy

Centre spacing and edge distance

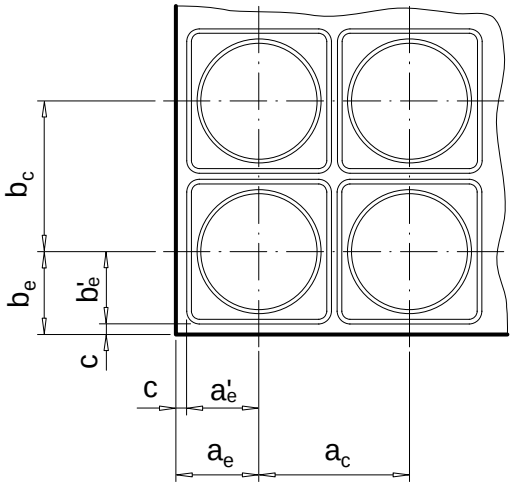

a_c, b_c
a_e, b_e

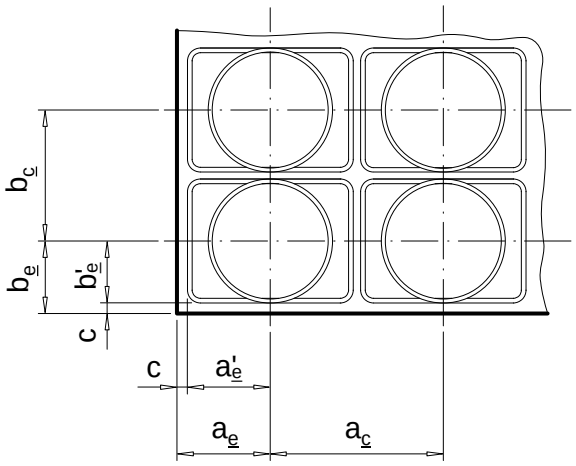

$a_{\underline{c}} \geq b_{\underline{c}}$
$a_{\underline{e}} \geq b_{\underline{e}}$

Modification of centre spacing and edge distance are in accordance with Clause 1.8.

$$b_{\underline{c}} \geq \begin{cases} 0.85 \cdot b_c \\ \text{and} \\ \geq \text{Helix, outside diameter } ^{1)} \end{cases}$$

$$a_{\underline{c}} \geq \frac{A_c}{b_{\underline{c}}}$$

$$A_c = a_c \cdot b_c \leq a_{\underline{c}} \cdot b_{\underline{c}}$$

Corresponding edge distances

$$a_{\underline{e}} = \frac{a_{\underline{c}}}{2} - 10\text{ mm} + c$$

and

$$b_{\underline{e}} = \frac{b_{\underline{c}}}{2} - 10\text{ mm} + c$$

c..... Concrete cover

1) Except the dimensions of helix, the outer dimensions of the additional stirrup reinforcement are adjusted accordingly. Further modifications of reinforcement are in accordance with the Clauses 1.12.7 and 2.2.3.4.

electronic copy

Stressing anchorage [1)]

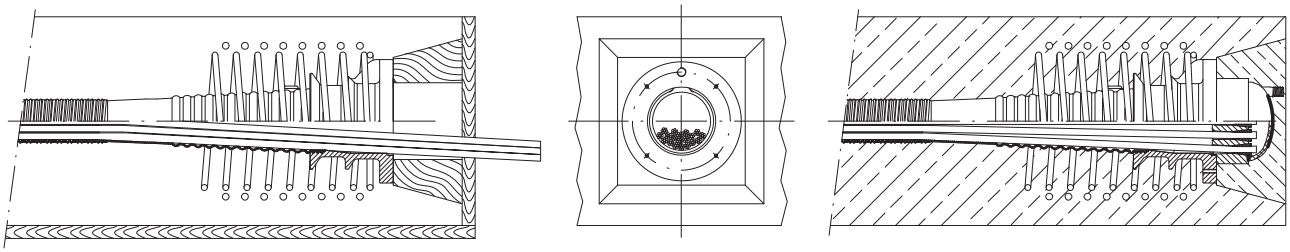

Fixed anchorage [1)]

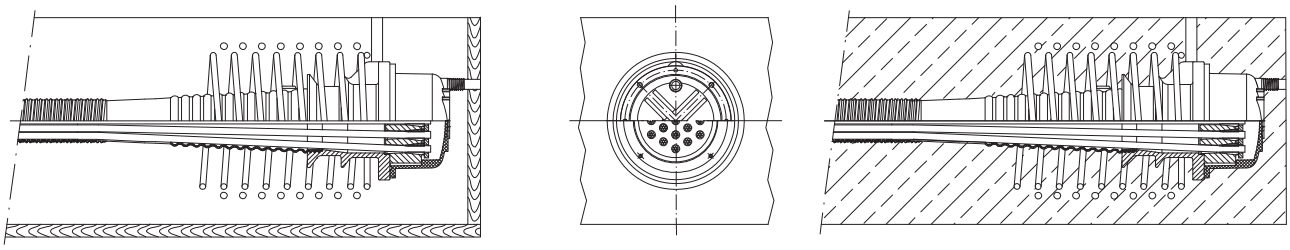

Fixed coupler FK

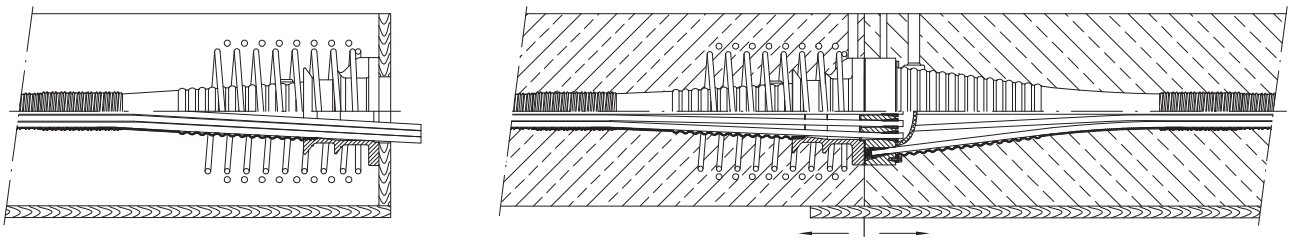

1. BA — 1st construction stage
2. BA — 2nd construction stage

Fixed coupler FH

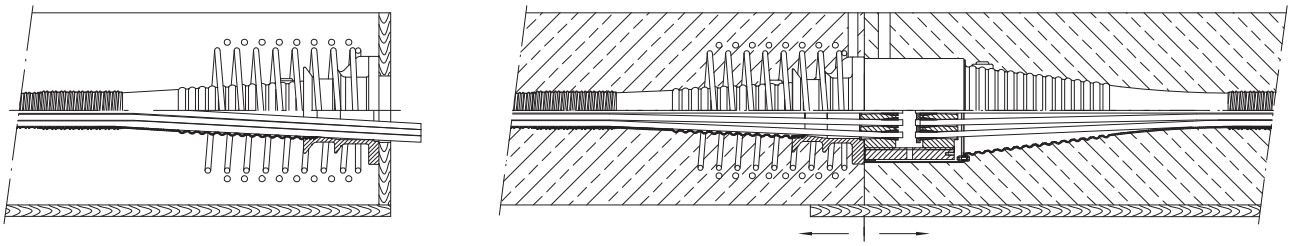

1. BA — 1st construction stage
2. BA — 2nd construction stage

[1)] For anchorages other than fully encapsulated or electrically isolated, steel caps are possible as well.

CONA CMI	**Bonded Post-tensioning System** Construction stages	**Annex 23** of European Technical Assessment **ETA-06/0147** of 30.10.2017

electronic copy electronic copy electronic copy electronic copy electronic copy electronic copy

1 Preparatory work

The components of the post-tensioning kit are stored so as to avoid any damage or corrosion.

2 Anchorage recesses

Adequate space to accommodate and to use the prestressing jack is ensured, see also Clause 1.2.6.

3 Fastening the bearing trumplates

Four holes are provided to fasten the bearing trumplates to the formwork. The trumpet is screwed into the bearing trumplate. The helix is either welded to the bearing trumplate by means of radial bars, see also the Clauses 1.12.7, 2.2.3.4, and 2.2.4.5 or positioned by fixing it to the existing reinforcement.

4 Placing of the sheaths

The sheaths are placed on supports with spacing according to Clause 1.6 and minimum radii of curvature according to Clause 1.9. The sheaths are jointed in a leak-proof way. The sheaths are supported such that any movement is prevented.

The same applies for prefabricated tendons.

5 Installation of tensile elements, prestressing steel

The prestressing steel is pushed or pulled into the sheath before or after concreting of the structure.

6 Installation of the inaccessible fixed anchorages

After passing the strands through the anchor head, they are anchored individually in the cones by means of ring wedges. After assembling the wedges are secured with springs or a wedge retaining plate.

7 Installation of fixed coupler anchor head 2.BA

The function of the fixed coupler is to connect two tendons, whereas the first tendon is stressed before the second tendon is installed and stressed.

The coupling is achieved by pushing the strands into the already stressed coupler anchor head K, side 2.BA in the outer pitch circle, whereby the strands are marked to check the correct depth of engagement.

The coupler anchor head H, 2.BA is assembled with ring wedges and a wedge retaining plate. It is connected to the already stressed coupler anchor head H, 1.BA by means of a threaded coupler sleeve.

8 Assembly of movable coupler

The movable coupler serves to lengthen unstressed tendons. The axial movement during stressing is ensured by a sheathing box suitable to the expected elongation at the position of the coupler.

The assembly of the coupler anchor heads is performed in accordance with Point 7 and the Clauses 1.2.4 and 2.2.4.1. The transverse forces at the end of the trumpet are covered by steel tension rings.

Member of EOTA

electronic copy electronic copy electronic copy electronic copy electronic copy electronic copy

9 Checking the tendons before concreting

Before concreting the structure, position and fastening of the entire tendon are checked and corrected if necessary. The sheaths are checked for any damage.

10 Assembly of anchor head/coupler anchor head 1.BA

After passing the strands through the anchor head, they are anchored individually in the cones by means of ring wedges. The same applies for the coupler anchor head in case of fixed couplers in the first construction stage.

11 Stressing

At the time of stressing the mean concrete compressive strength is at least according to Table 5 and the data of Clause 1.10. Stressing and possible wedging are carried out with a suitable prestressing jack and in accordance with Clause 2.2.4.2.

Elongation of the tendon and prestressing forces are checked and recorded systematically during the stressing operation.

Restressing the tendons is permitted in accordance with Clause 2.2.4.3.

12 Grouting the tendons

The grout is injected through the inlet holes until it escapes from the outlet tubes with the same consistency. All vents and grouting inlets are sealed immediately after grouting, see also Clause 2.2.4.4.

More detailed information on installation can be obtained from the ETA holder.

Member of EOTA

electronic copy electronic copy electronic copy electronic copy electronic copy electronic copy

Characteristics of granulate	Method	Specification
Melt Mass-Flow Rate MFR 230/5	ISO 1133	1.4 ± 0.3 g/10 min
Hardness: Ball indentation method H 132/30	ISO 2039-1	42 ± 5 N/mm^2
Charpy impact strength of notched specimens at + 23 °C	ISO 179-1 eA	≥ 35 kJ/m^2
Charpy impact strength of notched specimens at – 30 °C	ISO 179-1 eA	≥ 3 kJ/m^2
Tensile impact strength of notched specimens	ISO 8256	≥ 80 kJ/m^2
Tensile strength at yield	DIN 53455	≥ 24 N/mm^2
Elongation at yield	DIN 53455	≥ 8 %
Environmental stress cracking (ESC)	ASTM D1693-70	≥ 192 h
Vicat VST A50	ISO 306	≥ 70 °C
Linear expansion-coefficient – average value	DIN 53752	(140 to 180) · 10^{-6} K^{-1}
Elastic modulus	DIN 53457	1 580 ± 40 N/mm^2
Characteristics of duct	Method	Specification
Density	DIN 53479	0.90 ± 0.01 g/cm^3
Melt Mass-Flow Rate MFR 230/5, increase compared to the granulate	ISO 1133	≤ 0.4 g/10 min
Indentation test dependent on time and temperature – 1 hour	ISO 2039-1	≥ 27 N/mm^2 at 23 °C ≥ 23 N/mm^2 at 60 °C

Member of EOTA

electronic copy electronic copy electronic copy electronic copy electronic copy electronic copy

Contents of the prescribed test plan

Component	Item	Test / Check	Trace-ability	Minimum frequency	Documen tation
Bearing trumplate, Bearing trumplate E	Material	Check	Full	100 %	"3.1" [1]
	Detailed dimensions	Test		3 % ≥ 2 specimens	Yes
	Visual inspection [2]	Check		100 %	No
Anchor head, Coupler anchor head	Material	Check	Full	100 %	"3.1" [1]
	Detailed dimensions [3]	Test		5 % ≥ 2 specimens	Yes
	Visual inspection [2], [4]	Check		100 %	No
Ring wedge	Material	Check	Full	100 %	"3.1" [1]
	Treatment, hardness [5], [6]	Test		0.5 % ≥ 2 specimens	Yes
	Detailed dimensions	Test		5 % ≥ 2 specimens	Yes
	Visual inspection [2], [7]	Check		100 %	No
Steel ring	Material	Check	Bulk	100 %	"2.2" [8]
	Detailed dimensions	Test		0.5 % ≥ 2 specimens	Yes
	Visual inspection [2]	Check		100 %	No
Coupler sleeve	Material	Check	Full	100 %	"3.1" [1]
	Detailed dimensions	Test		5 % ≥ 2 specimens	Yes
	Visual inspection [2]	Check		100 %	No
Steel strip sheath	Material	Check	"CE"	100 %	"CE"
	Visual inspection [2]	Check		100 %	No
Prestressing steel strand [9]	Material	Check	Full	100 %	"CE" [9]
	Diameter	Test		Each coil	No
	Visual inspection [2]	Check		Each coil	No
Constituents of filling material as per EN 447	Cement	Check	Full	100 %	"CE"
	Admixtures, additions	Check	Bulk	100 %	"CE"
Components for electrically isolated tendon	Material	Check	Full	100 %	MC [10]
	Visual inspection [2]	Check		100 %	No
BBR VT Plastic Duct	See Annex 28				

1) "3.1": Inspection certificate type "3.1" according to EN 10204
2) Visual inspections includes e.g. main dimensions, gauge testing, correct marking or labelling, appropriate performance, surface, fins, kinks, smoothness, corrosion, coating, etc., as detailed in the prescribed test plan.
3) Other dimensions than [4]
4) Dimensions: All conical bores of the anchor heads and coupler anchor heads regarding angle, diameter and surface condition, thread dimensions of all anchor heads and coupler anchor heads
5) Geometrical properties
6) Surface hardness
7) Teeth, cone surface
8) "2.2": Test report type "2.2" according to EN 10204
9) As long as the basis for CE marking of prestressing steel is not available, an approval or certificate according to the respective standards and regulations in force at the place of use accompanies each delivery.
10) Certificate of the manufacturer of the material that allow for proof of conformity.

Full ..... Full traceability of each component to its raw materials
Bulk ..... Traceability of each delivery of components to a defined point

electronic copy electronic copy electronic copy electronic copy electronic copy electronic copy

Component	Item	Test / Check	Trace-ability	Minimum frequency	Documen tation
BBR VT Plastic Duct	Raw material [1]	Check	Full	100 %	MC [2]
	Melt mass-flow rate [1]	Test		1 per batch [4]	Yes
	Notched impact [1], [3]	Test			
	Flexural modulus [1], [5]	Test			
	Tensile yield strength [1], [6]	Test			
	Elongation at yield and at break [1], [6]	Test			
	OIT [7], [8]	Test		1 per batch [4]	Yes
	ESCR [7], [9]	Test			
	Melt mass-flow rate [7]	Test			
	Density [7]	Test			
	Detailed dimensions [10]	Test		≥ 2 specimens per working shift [11]	Yes
	Longitudinal mass [10]	Test			
	Stiffness of duct [10], [12]	Test		1 per batch of duct + 1 per every new material batch + 1 per every additional new month of continuous duct production	Yes
	Longitudinal load resistance of duct [10], [13]	Test			
	Lateral load resistance of duct [10], [13]	Test			
	Flexibility of duct [10], [13]	Test			
	Leak tightness [10], [13]	Test			
	Wear resistance of duct [10], [13]	Test			
	Visual inspection [14]	Check		100 %	No

1) Tests and checks performed on specimen made of the compound for duct production.
2) Certificate of the manufacturer of the raw material that allow for proof of conformity.
3) Charpy V test ISO 179-1, 1eA at + 23 °C and 0 °C
4) At each change of batch of any raw material for duct production
5) Flexural modulus of elasticity according to ISO 178
6) Test according to ISO 6259-3.
7) Tests on specimen from manufactured duct
8) Tested at 200 °C according to ISO 11357-6
9) Environmental stress cracking resistance according to ASTM D 1693
10) Tests on duct
11) 2 specimens per working shift, plus 2 specimens at start of production
12) Testing in flexure according to *fib* Bulletin 7.
13) Tests according to *fib* Bulletin 7.
14) Visual inspection includes correct size and shape, smoothness, fins, kinks, cavities, correct marking or labelling.

Member of EOTA

electronic copy electronic copy electronic copy electronic copy electronic copy electronic copy

Audit testing

Component	Item	Test / Check	Sampling [2] – Number of components per visit
Anchor head, Coupler anchor head, Bearing trumplate, Bearing trumplate E, Steel ring	Material according to specification	Test / Check	1
	Detailed dimensions	Test	
	Visual inspection [1]	Check	
Coupler sleeve	Material according to specification	Test / Check	1
	Detailed dimensions	Test	
	Visual inspection [1]	Check	
Ring wedge	Material according to specification	Test / Check	2
	Treatment	Test	2
	Detailed dimensions	Test	1
	Main dimensions, surface hardness and surface finish	Test	5
	Visual inspection [1]	Check	5
Single tensile element test	Single tensile element test according to ETAG 013, Annex E.3	Test	1 series

[1] Visual inspections means e.g. main dimensions, gauge testing, correct marking or labelling, appropriate performance, surface, fins, kinks, smoothness, corrosion protection, corrosion, coating, etc., as given in the prescribed test plan.

[2] All samples are randomly selected and clearly identified.

electronic copy electronic copy electronic copy electronic copy electronic copy electronic copy

№	Essential Characteristic	Clause	Intended use Line № according to Clause 2.1, Table 7						
			1	2	3	4	5	6	7
1	Resistance to static load	3.2.1.1	+	+	+	+	+	+	+
2	Resistance to fatigue	3.2.1.2	+	+	+	+	+	+	+
3	Load transfer to the structure	3.2.1.3	+	+	+	+	+	+	—
4	Friction coefficient	3.2.1.4	+	+	+	+	+	+	+
5	Deviation, deflection (limits)	3.2.1.5	+	+	+	+	+	+	+
6	Practicability, reliability of installation	3.2.1.6	+	+	+	+	+	+	+
7	Content, emission, and/or release of dangerous substances	3.2.2	+	+	+	+	+	+	+
8	Related aspects of serviceability	3.2.3	+	+	+	+	+	+	+
9	Resistance to static load under cryogenic conditions	3.2.4.1	—	—	+	—	—	—	—
10	Practicability, reliability of installation	3.2.4.2	—	—	—	+	—	—	—
11	Practicability, reliability of installation	3.2.4.3	—	—	—	—	+	—	—
12	Practicability, reliability of installation	3.2.4.4	—	—	—	—	—	+	—
13	Load transfer to the structure	3.2.4.5	—	—	—	—	—	—	+

Key
+.....Essential characteristic relevant for the intended use
—.....Essential characteristic not relevant for the intended use

For combinations of intended uses the essential characteristics of all intended uses composing the combination are relevant.

Member of EOTA

electronic copy electronic copy electronic copy electronic copy electronic copy electronic copy

Reference documents

Guideline for European Technical Approval

ETAG 013, 06.2002	Guideline for European Technical Approval of Post-Tensioning Kits for Prestressing of Structures

Standards

EN 206, 12.2013	Concrete – Specification, performance, production and conformity
EN 445, 10.2007	Grout for prestressing tendons – Test methods
EN 446, 10.2007	Grout for prestressing tendons – Grouting procedures
EN 447, 10.2007	Grout for prestressing tendons – Basic requirements
EN 523, 08.2003	Steel strip sheaths for prestressing tendons – Terminology, requirements, quality control
EN 1561, 10.2011	Founding – Grey cast irons
EN 1563, 12.2011	Founding – Spheroidal graphite cast irons
Eurocode 2	Eurocode 2 – Design of concrete structures
Eurocode 3	Eurocode 3 – Design of steel structures
Eurocode 4	Eurocode 4 – Design of composite steel and concrete structures
Eurocode 6	Eurocode 6 – Design of masonry structures
EN 10025-2, 11.2004 EN 10025-2/AC, 06.2005	Hot rolled products of structural steels – Part 2: Technical delivery conditions for non-alloy structural steels
EN 10083-1, 08.2006	Steels for quenching and tempering – Part 1: General technical delivery conditions
EN 10083-2, 08.2006	Steels for quenching and tempering – Part 2: Technical delivery conditions for non alloy steels
EN 10084, 04.2008	Case hardening steels – Technical delivery conditions
EN 10204, 10.2004	Metallic products – Types of inspection documents
EN 10210-1, 04.2006	Hot finished structural hollow sections of non-alloy and fine grain steels – Part 1: Technical delivery conditions
EN 10216-1, 12.2013	Seamless steel tubes for pressure purposes – Technical delivery conditions – Part 1: Non-alloy steel tubes with specified room temperature properties
EN 10217-1, 05.2002 EN 10217-1/A1, 01.2005	Welded steel tubes for pressure purposes – Technical delivery conditions – Part 1: Non-alloy steel tubes with specified room temperature properties
EN 10219-1, 04.2006	Cold formed welded structural hollow sections of non-alloy and fine grain steels – Part 1: Technical delivery conditions
EN 10255+A1, 04.2007	Non-Alloy steel tubes suitable for welding and threading – Technical delivery conditions
EN 10270-1, 10.2011	Steel wire for mechanical springs – Part 1: Patented cold drawn unalloyed steel wire
EN 10277-2, 03.2008	Bright steel products - Technical delivery conditions – Part 2: Steels for general engineering purposes
EN 10305-5, 01.2010	Steel tubes for precision applications – Technical delivery conditions – Part 5: Welded cold sized square and rectangular tubes
EN ISO 17855-1, 10.2014	Plastics – Polyethylene (PE) moulding and extrusion materials – Part 1: Designation system and basis for specifications
EN ISO 19069-1, 03.2015	Plastics – Polypropylene (PP) moulding and extrusion materials – Part 1: Designation system and basis for specifications
prEN 10138-3, 09.2000	Prestressing steels – Part 3: Strand
prEN 10138-3, 08.2009	Prestressing steels – Part 3: Strand

electronic copy

ISO 178, 12.2010 ISO 178 AMD 1, 04.2013	Plastics – Determination of flexural properties
ISO 179-1, 06.2010	Plastics – Determination of Charpy impact properties – Part 1: Non-instrumented impact test
ISO 306, 11.2013	Plastics – Thermoplastic materials – Determination of Vicat softening temperature (VST)
ISO 1133, 06.2005	Plastics – Determination of the melt mass-flow rate (MFR) and the melt volume-flow rate (MVR) of thermoplastics – Part 1: Standard method
ISO 2039-1, 12.2001	Plastics – Determination of hardness – Part 1: Ball indentation method
ISO 6259-3, 06.2015	Thermoplastics pipes – Determination of tensile properties – Part 3: Polyolefin pipes
ISO 8256, 07.2004	Plastics – Determination of tensile-impact strength
ISO 11357-6, 06.2008	Plastics – Differential scanning calorimetry (DSC) – Part 6: Determination of oxidation induction time (isothermal OIT) and oxidation induction temperature (dynamic OIT)
DIN 53455, 06.1988	Testing of plastics – Tensile test
DIN 53457, 10.1987	Testing of plastics – Determination of the elastic modulus by tensile, compression and bend testing
DIN 53479, 10.1991	Testing of Plastics and Elastomers – Determination of Density
DIN 53752, 12.1980	Testing of plastics – Determination of the coefficient of linear thermal expansion
ASTM D1693-70	Standard Test Method for Environmental Stress-Cracking of Ethylene Plastics

Other documents

CWA 14646, 01.2003	Requirements for the installation of post-tensioning kits for prestressing of structures and qualification of the specialist company and its personnel
fib bulletin 7, 01.2000	Corrugated plastic ducts for internal bonded post-tensioning
fib bulletin 33, 12.2005	Durability of post-tensioning tendons
98/456/EC	Commission decision 98/456/EC of 3 July 1998 on the procedure for attesting the conformity of construction products pursuant to Article 20 (2) of Council Directive 89/106/EEC as regards posttensioning kits for the prestressing of structures, Official Journal of the European Communities L 201 of 17 July 1998, p. 112
305/2011	Regulation (EU) № 305/2011 of the European Parliament and of the Council of 9 March 2011 laying down harmonised conditions for the marketing of construction products and repealing Council Directive 89/106/EEC, OJ L 88 of 4 April 2011, p. 5, amended by Commission Delegated Regulation (EU) № 568/2014 of 18 February 2014, OJ L 157 of 27.05.2014, p. 76 and Commission Delegated Regulation (EU) № 574/2014 of 21 February 2014, OJ L 159 of 28.05.2014, p. 41
568/2014	Commission Delegated Regulation (EU) № 568/2014 of 18 February 2014 amending Annex V to Regulation (EU) № 305/2011 of the European Parliament and of the Council as regards the assessment and verification of constancy of performance of construction products, OJ L 157 of 27.05.2014, p. 76

Additional Data to BBR VT CONA CMI - ETA 06/0147

Anchorage Recesses - minimum space requirements for stressing jack

Anchorage recesses are best designed, if enough space for handling to cut strands and also for proper filling of the recess is given (e.g.: inclined top and side planes, or open top of recess)

Anchorage
state before stressing

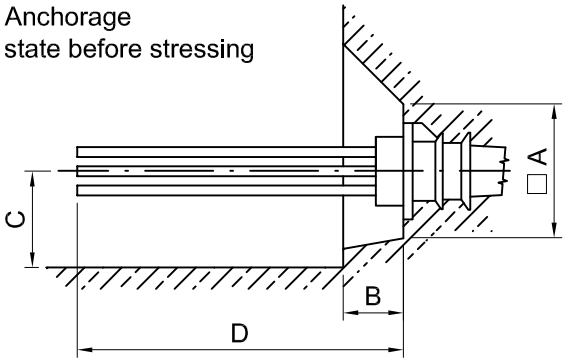

Anchorage SA / FA
final state
Example with inclined tendon axis

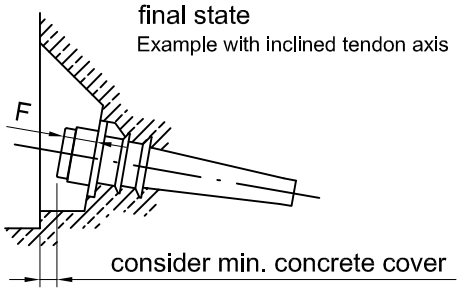

During stressing

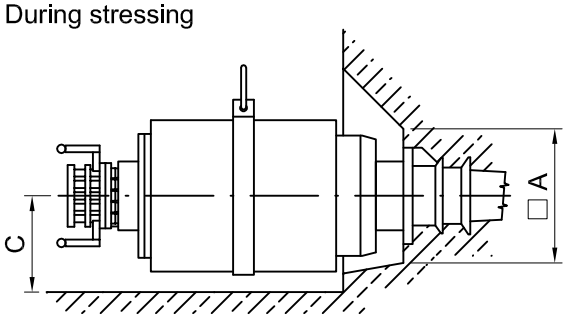

View at recess

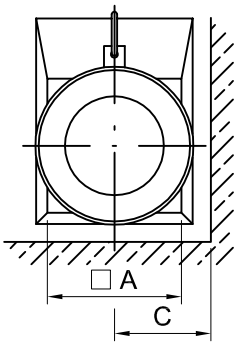

View at constr. joint

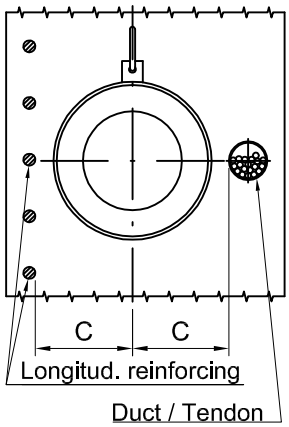

Jack mounting- /
unmounting

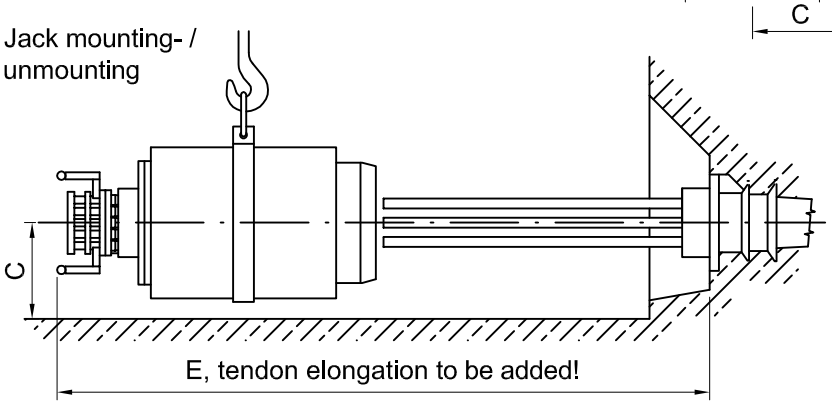

Number of strands				04	07	09	12	15	19	19	22	22	24	27	31
Stressing force *	**max.**	**kN**		**935**	**1.636**	**2.103**	**2.804**	**3.506**	**4.000**	**4.440**	**4.500**	**5.141**	**5.609**	**6.310**	**7.245**
Type of Jack				VT 1000	VT 1800	VT 2700	VT 2700	VT 4000	VT 4000	VT 4500	VT 4500	please contact KB-VT	please contact KB-VT	VT 7000	VT 7000
Width/Height of recess	min.	mm	A	190	290	310	310	370	370	390	390			580	580
Depth of recess	max.	mm	B	130	145	165	170	170	180	180	190			210	215
Distance to next edge	min.	mm	C	130	190	230	230	265	265	280	280			350	350
Strand excess length before stressing	min.	mm	D	400	760	810	810	880	880	980	1.010			1.150	1.150
Space requirements for mounting of jack	min.	mm	E	1.050	1.560	1.650	1.650	1.770	1.770	1.970	2.020			2.400	2.400
for unmounting of jack, tendon elongation to be added!															
Height of anchorage incl. grouting cap		mm	F	97	103	108	113	123	133	133	145	145	158	163	168

* The given values are maximum values according to Eurocode 2. The actual values have to be taken from the standards and regulations in force at the place of use.

In case of very narrow available space please contact KB-VT!

Additional Data to BBR VT CONA CMI - ETA 06/0147

Eccentricity of tendons, depending on tendon size and duct dimension

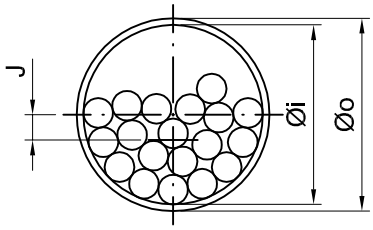

Duct dimension in consultation with KB-VT if needed; it depends on e.g.: length and geometrical layout of tendon, instant of time when fixing the strand (before/after concreting)

Number of strands			**04**	**07**		**09**			**12**			**15**				**19**			
Duct ∅ inner	mm	Øi	45	55	60	60	65	70	70	75	80	75	80	85	90	85	90	95	100
Duct ∅ outer	mm	Øo	52	62	67	67	72	77	77	82	87	82	87	92	97	92	97	102	109
Eccentricity	**mm**	**J**	**6,2**	**5,4**	**8,9**	**4,1**	**8,2**	**11,6**	**5,9**	**9,9**	**13,9**	**5,0**	**9,0**	**12,2**	**15,6**	**6,2**	**9,7**	**13,4**	**16,7**

Number of strands			**22**					24	**27**					**31**				
Duct ∅ inner	mm	Øi	90	95	100	105	110	Please contact KB-VT	100	105	110	115	120	110	115	120	125	130
Duct ∅ outer	mm	Øo	97	102	109	114	119		109	114	119	124	129	119	124	129	134	139
Eccentricity	**mm**	**J**	**5,1**	**9,4**	**13,0**	**16,9**	**20,2**		**6,8**	**10,9**	**14,6**	**17,8**	**21,1**	**10,1**	**13,5**	**16,8**	**20,3**	**23,7**

The given values are theoretical for strand 150mm²

Details for mounting of anchorages

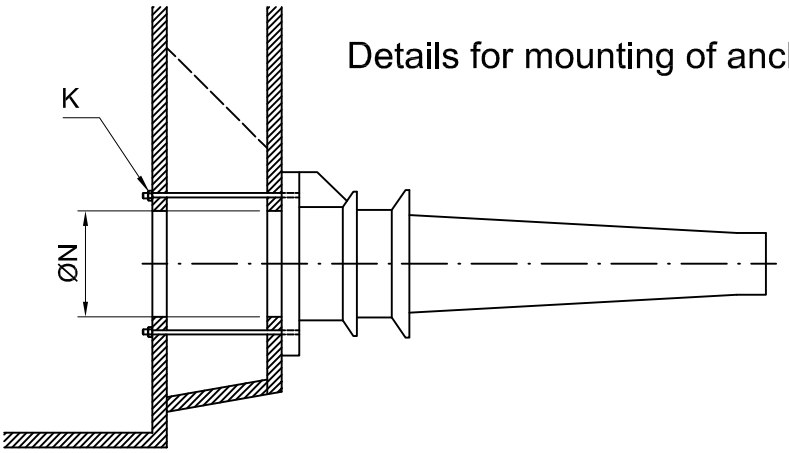

Options of recesses
inclined top: open top:

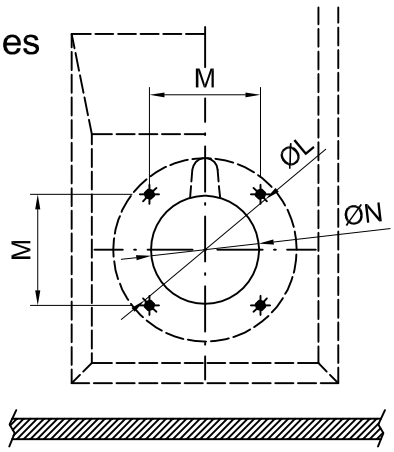

Number of strands				**04**	**07**	**09**	**12**	**15**	**19**	**22**	**24**	**27**	**31**
Fastening to the formwork with 4 nos. of thread bars											Please contact KB-VT		
Dimension of thread bar			K	M8	M8	M8	M8	M8	M8	M10		M10	M10
Pitch diameter		mm	ØL	115	155	200	200	240	240	265		295	295
Distance of bores	ca.	mm	M	81	110	141	141	170	170	187		209	209
Opening in formwork for pushing through of strands													
Diameter of bore in formwork	min.	mm	ØN	75	95	130	130	165	165	185		210	210

CAD-sketches and additional data are available at KB-VT, on request .

Certificate of constancy of performance
0432-CPR-00299-1.1-EN

Version 02

In compliance with Regulation (EU) No 305/2011 of the European Parliament and of the Council of 9 March 2011 (the Construction products Regulation or CPR), this certificate applies to the construction product

BBR VT CONA CMI – Bonded Post-tensioning System with 04 to 31 Strands

(Post-tensioning kit for prestressing of structures with internal bonded strands)

placed on the market under the name or trade mark of

BBR VT International Ltd
Ringstr. 2
8603 Schwerzenbach (ZH) / Switzerland

and produced in the manufacturing plant(s)

BBR VT International Ltd
Ringstr. 2
8603 Schwerzenbach (ZH) / Switzerland

This certificate attests that all provisions concerning the assessment and verification of constancy of performance described in the

ETA-06/0147, issued on 30.10.2017

and

ETAG 013 - Post Tensioning Kits for prestressing of Structures

under **system 1+** for the performance set out in the ETA are applied and that the factory production control conducted by the manufacturer is assessed to ensure the

constancy of performance of the construction product.

This certificate was first issued on 17.08.2016 and will remain valid until 23.11.2022 as long as neither the ETA, the EAD, the construction product, the AVCP methods nor the manufacturing conditions in the plant are modified significantly, unless suspended or withdrawn by the notified product certification body.

Dortmund, 24.11.2017

by order

Dipl.-Ing. Hönig
Head of Certification Body (Dez. 21)

Materialprüfungsamt MPA NRW 10 Nordrhein-Westfalen

This Certificate consists of 1 page.

This Certificate replaces the Certificate no. 0432-CPR-00299-1.1 dated 30.06.2013, Version 01.

The original of this document was issued in German language. In case of doubt only the German version is valid.

DAkkS Deutsche Akkreditierungsstelle D-ZE-11142-01-01

KB Vorspann-Technik GmbH
Weitwörth 25
5151 Nussdorf a. H.
Austria

Tel +43 6272 40790
Fax +43 6272 40790 11

www.kb-vt.com
office@kb-vt.com

BBR VT International Ltd
Technical Headquarters and Business Development Centre
Switzerland

A Global Network of Experts
www.bbrnetwork.com

Copyright BBR VT International 04.2019